G-clamp Programmer's Guide

version 1.2

Paul H.M. Kullmann and John P. Horn

Department of Neurobiology and Center for the Neural Basis of Cognition
University of Pittsburgh School of Medicine
E 1440 Biomedical Science Tower
Pittsburgh, PA 15261
http://www.neurobio.pitt.edu

To download this document and the G-clamp program go to:
(http://hornlab.neurobio.pitt.edu)

Contact Information:

Dr. Paul H.M. Kullmann
Phone: 412-648-9291
pkullman@pitt.edu

Dr. John P. Horn
Phone: 412-648-9429
jph@pitt.edu

Grant Support: This document and the G-clamp software that it describes were both developed at the University of Pittsburgh with support from National Institutes of Health grant RO1 NS21065.

First Edition 2003, Revised, October 1, 2004

Table of Contents

1 Who should read this guide?

This guide is intended for G-clamp users who have a basic knowledge of LabVIEW programming, though not necessarily of LabVIEW-RT, and who want to develop a custom experiment module or to make other program modifications.

The document focuses upon the operation of the main VIs (G-clamp.vi and the experiment module VIs) and their custom sub-VIs. To illustrate how G-clamp works, we follow program flow during an experiment. This approach takes the reader through essential elements within the wiring diagrams. It also explains our rationale for choosing certain programming structures over possible alternatives. Some of the decisions we made in designing G-clamp simply reflect generally principles of efficient LabVIEW programming and will thus be familiar to experienced LabVIEW programmers. Hopefully these sections will also be helpful to those G-clamp users who are less experienced in LabVIEW programming, yet wish to understand how the program works. In addition to describing aspects of G-clamp that adhere to standard LabVIEW conventions, this manual also stresses programming techniques that are specific to real-time applications using LabVIEW-RT. In particular, we wanted to outline the concepts that went into creating a dynamic clamp program that not only does the job, but that gets maximum performance out of the hardware. Having made such a bold claim, we do not wish to imply that G-clamp lacks room for improvement! Quite the contrary, we believe that through continuing use in electrophysiology experiments, we and others will discover limitations in the present program and ways to further enhance performance. In this spirit, we encourage comments and suggestions for improvements in the program and in the documentation that we have written.

2 Future direction of G-clamp development

Since its beginning in the spring of 2001, the G-clamp project has evolved through numerous changes. Although the present version (1.2) is fully functional, the program remains in a continuing state of development. This year, for example, we added a new

V-clamp experiment module so that one can conduct hybrid experiments that switch between voltage-clamp and dynamic current-clamp modes. We have also supported other users in modifying the existing experiment modules for their specific needs. Several ideas under consideration for inclusion in a future release of G-clamp, version 2, include:

- The ability to generate irregularly timed stimulus pulses that can drive nerve stimulation and thereby mimic the activity represented by synaptic template files.
- The implementation of synaptic template files that can create multiple types of virtual synapses, e.g. excitatory and inhibitory, NMDA vs AMPA-type kinetics and voltage-sensitivity.
- Generation of an experimental logging function. This feature would automatically generate a text file that contains a running record of all events in an experiment, including the parameters used. It would also include a new 'comments' field that could be used to track additional information about the experiment (e.g. drug-applications). The format of the log file could be either a simple text file or a formatted file with fields whose content could be be bulk-loaded into a relational database.
- Simplify the procedure for adding new experiment modules. This would require changing the way in which experiment modules are integrated into the user interface G-clamp.vi. At present, every experiment module is hard-wired into G-clamp.vi and this requires making changes at several program locations into order to add a new module. The revised program would simplify the process by implementing a plug-in architecture. At program start, G-clamp.vi would scan the plug-in directory for experiment modules and make them available for the user. Thus would reduce to process of programming or modifying an experiment module VI to the simpler task of writing the module and placing it in a plug-in directory.
- Provide error/debugging information from program components executing on the embedded computer during development of new experiment modules.

3 Overview of G-clamp program architecture

G-clamp, v1.2, consists of 2 parts that are divided between the host and embedded computers:

1. The library **G-clamp.llb** resides on the host computer: **G-clamp.llb** contains **G-clamp.vi**, which acts as the G-clamp user interface. **G-clamp.vi** is marked as a top-level VI in **G-clamp.llb** and thus opens automatically when **G-clamp.llb** is opened. The remaining files in **G-clamp.llb,** which are either standard LabVIEW VIs or custom VIs, all operate as sub-VIs in **G-clamp.vi**.
2. The library **Embedded.llb** resides on the embedded computer: **Embedded.llb** contains the VIs that constitute the experiment modules, the RT loop module and the conductance modules. **Embedded.llb** also contains a set of standard and custom VIs that are required as sub-VIs.

In the standard LabVIEW-RT architecture, as advertised by National Instruments, the host computer acts only as a graphical interface for program development and as the display of the VI front panel. For program execution, the code is automatically downloaded to the embedded processor[1]. While this arrangement works well, it constrains performance because some of the memory and other resources available on the embedded processor must be dedicated to supplying display information to the host. In order to maximize the embedded resources available for data collection and storage, we employed an alternative programming method that involves LabVIEW being targeted to the host computer, as opposed to the embedded processor. With LabVIEW targeted to the host computer, the **G-clamp.vi** running on the host acts as a client that uses the VI server of the LabVIEW RT Engine on the embedded computer to start and execute experiment module VIs.

[1] Compare Chapter 3 Software Overview/Programming LabVIEW-RT/Using the RT Development System with /Communicating Using Host LabVIEW Applications in the LabVIEW Real-Time User Manual.

In general, experiment module VIs are organized to perform two tasks in parallel (for details and exceptions see the individual descriptions of the experiment modules[3]):

- execute a sub-VI that performs experiment-specific operations (e.g. loading a template from file or analyzing an acquired trace to adjust parameters for the next iteration) and the dynamic clamp by calling the RT Loop module VI, and
- use a dedicated TCP/IP connection to send acquired traces to and receive user commands from the user interface VI.

While these two tasks are organized in parallel, the high execution priority of the RT Loop module VI ensures that the dynamic clamp operation always takes precedence and thus communication with the user interface VI occurs only in between iterations or after the dynamic clamp experiment has finished.

Running the user interface on the host computer as a client for the experiment module VIs running on the embedded computer as opposed to downloading and executing everything on the embedded computer has advantages and disadvantages:

The main reason why this architecture was adopted was to be able to run dynamic clamp experiments uninterrupted for several minutes and thus to preserve as much memory as possible for templates used and traces acquired during such experiments[4]. The chosen architecture aids in this goal by delegating the memory- (and time-) consuming process of displaying traces to the host computer. It also allows for other memory- (and time-) consuming processes like post-experiment analysis to be delegated to the host computer.

The main disadvantage of this architecture is that when LabVIEW is targeted to the host computer it is not possible to apply LabVIEW debugging tools like probes, execution highlighting etc. to experiment module VIs and their sub-VIs as these are executing on the embedded computer.

[3] Sections 3 and 5

[4] Attempts to circumvent the problem of finite memory by performing file IO (loading the template and saving acquired traces) on the fly, i.e. while the experiment is in progress, were unsuccessful when running the dynamic clamp on a PXI-8170 controller at a feedback loop rate of 20 kHz. This might become an option in the future, when faster processors and/or hard drives become available.

4 The user interface: G-clamp.VI

G-clamp.vi is a queue-driven state machine: A *While Loop* loops continually as long as G-clamp is running and executes exactly one case of a *Case Structure* during each iteration. The selector determining which case to execute is a string derived from a queue[5], which operates as a FIFO buffer (first-in-first-out). If the queue is empty, **Remove Queue Element.vi** times out after 1 ms and the default-case ("Check Controls") is executed. The main purpose of the default-case "Check Controls" is to detect user interactions with front panel controls using an *Event Structure* and to add the appropriate string to the queue. The *Event Structure* processes all defined user events that accumulated before **G-clamp.vi** execution got to the *Event Structure* by executing the appropriate event case(s). If no event occurred, the *Event Structure* waits for a certain time before timing out and letting **G-clamp.vi** execution proceed.

Thus the architecture of **G-clamp.vi** as a queue-driven state machine ensures that **G-clamp.vi** execution performs only required actions without wasting processor time on executing currently unnecessary functions. Use of the *Event Structure* guarantees that no user interaction goes undetected and is dealt with in the correct order while in the absence of a user interaction waiting of the *Event Structure* until it times out (or an event occurs) keeps **G-clamp.vi** idle and thus the host computer's CPU free to perform other tasks.

The following sections will provide a detailed look at G-clamp.vi by systematically going through individual cases of the state machine.

4.1 G-clamp start and program initialization

Code execution starts with creating the queue, inserting the string 'Initialize' into it and with initializing several shift registers that are used to carry the values of several variables from one iteration to the next of the large outer *While Loop*.

[5] The queue-VIs used are LabVIEW 6.0-style which allow only strings to be used as queue elements. In LabVIEW 6.1 these VIs have been replaced with queue-VIs that allow any data type to be used.

4.1.1 Initialize

An *Open VI Reference* provided with the path of **G-clamp.vi** is used to obtain a VI reference to **G-clamp.vi**. This reference is subsequently used to invoke methods (reinitialize all front panel controls to their defaults) and to set properties (front panel window title) of **G-clamp.vi**. For later use in other cases, the **G-clamp.vi** VI reference is bundled into the corresponding cluster element of the large cluster that is passed from one iteration of the outer *While Loop* to the next via the top shift register.

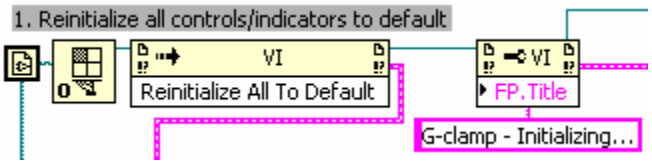

1. A VI reference to **G-clamp.llb/TargetList.vi** is obtained to invoke the method 'Get Control Value' on the control 'PXI Target'. This control of **TargetList.vi** contains all required information about the PXI controller last used[6]. The 'Get Control Value'-method returns a string, which has to be converted into a meaningful data format. This is done by providing the *Unflatten From String* function with a constant of the same data format as the control on which 'Get Control Value' was invoked. After the *Invoke Node* has executed, the VI reference to **TargetList.vi** is discarded with a *Close LV Object Reference*.

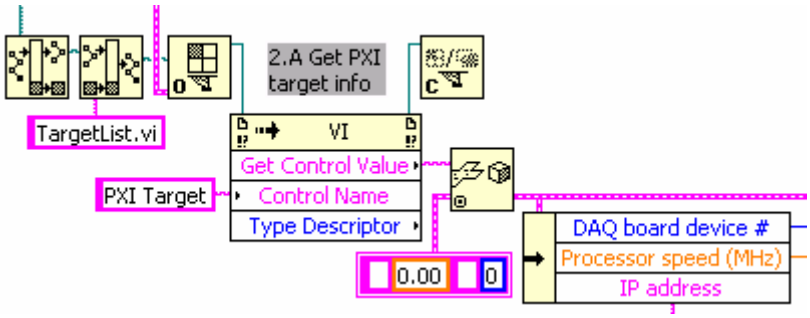

   Again, for later use in other cases, the PXI target information is bundled into the corresponding cluster element of the large cluster that is passed from one iteration of the outer *While Loop* to the next via the top shift register.

2. The IP address of the PXI controller obtained in the previous step is now used to establish a connection to the VI server of the LabVIEW RT Engine on the PXI

[6] For why that information is available in the control 'PXI Target' see section 8.5 TargetList.VI

controller using an *Open Application Reference*. This reference enables *Open VI Reference* to obtain a reference to **Embedded.llb/List Templates.vi** and to execute **List Templates.vi** by invoking the method 'Run VI'. After **List Templates.vi** has stopped, G-clamp.vi invokes the method 'Get Control Value' on the controls 'Available templates' and 'Virtual G's' of **List Templates.vi**. Finally, the VI reference to **List Templates.vi** is closed. Any errors that might occur during this process are reported by **Simple Error Handler.vi**.

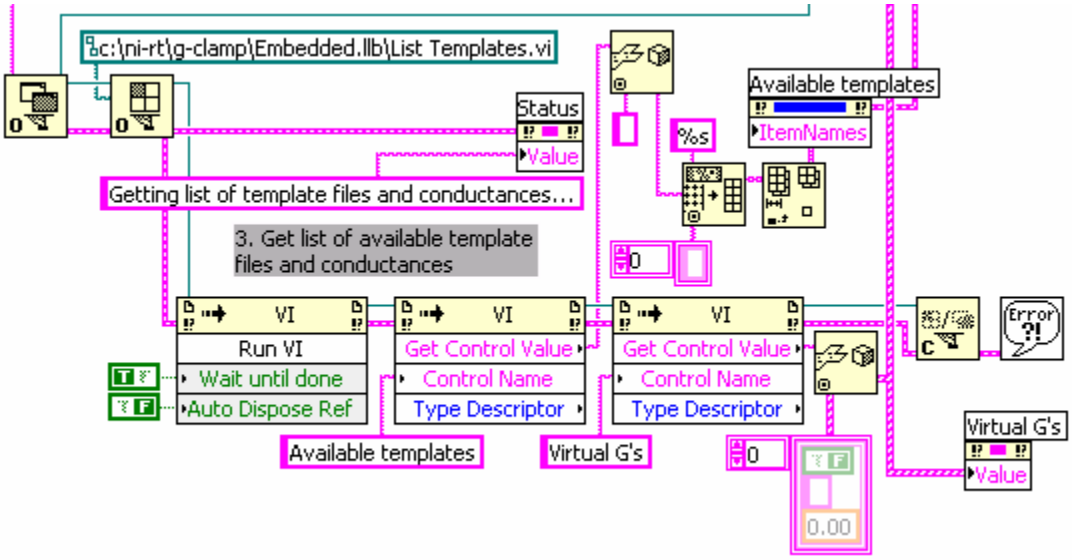

The strings returned by the method 'Get Control Value' are unflattened. Some further processing is required before the names of the available template files can be made visible to the user by updating the property 'ItemNames' of the **Listbox** control 'Available templates'. Because the control 'Virtual G's' of **List Templates.vi** is an exact copy of the control on the 'Virtual G's' page of the **G-clamp.vi** front panel, the output of *Unflatten From String* can be used directly to update the 'Value' property of the that control.

Again, for later use in other cases, the information about the virtual conductances is bundled into the corresponding cluster element of the large cluster that is passed from one iteration of the outer *While Loop* to the next via the top shift register.

While steps 1 to 3 are in progress, **G-clamp.vi** prompts the user to specify the directory on the host computer used for saving data files.

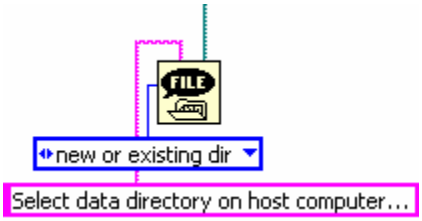

This information is also bundled into the corresponding cluster element of the large cluster that is passed from one iteration of the outer *While Loop* to the next via the top shift register.

An 'Enable/Disable Controls'- and 'Initialize2'-string are added to the queue.

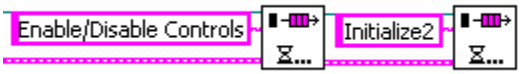

While **G-clamp.vi** execution consequently proceeds with the 'Enable/Disable Controls'-case, it suffices here to say that this case will set the enabled-state of **G-clamp.vi** front panel controls in accord to set parameters for the IV Relation experiment module. The precise working of the 'Enable/Disable Controls'-case is explained in section 4.1.4.

4.1.2 Initialize2

1. **G-clamp.vi** next retrieves the settings used last for usage and scaling of the analog-in and analog-out channels. These are stored in the values of the controls 'AI Cluster' and 'AO Cluster' of **G-clamp.llb/AnalogInOutConfig.vi**. Thus a VI reference is opened to **AnalogInOutConfig.vi** and the method 'Get Control Value' is invoked on the controls 'AI Cluster' and 'AO Cluster'. The obtained strings are unflattened and the retrieved settings are stored in the corresponding cluster element 'AI Cluster' and "AO Cluster' of the large cluster that is passed from one iteration of the outer *While Loop* to the next via the top shift register.

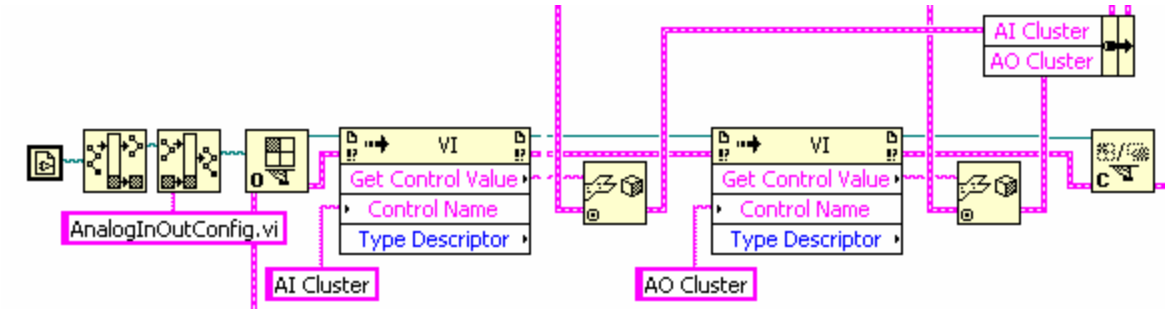

'AI Cluster' of the large cluster also contains 'Processor speed (MHz)' as sub-element and "AO Cluster' of the large cluster also contains 'device #' as sub-element. The correct values for these sub-elements have been obtained already (see section 2 in 4.1.1 Initialize) and are now overwritten with wrong settings derived from **AnalogInOutConfig.vi**. To maintain the correct settings, these are read out of the large cluster and used to replace the incorrect settings after 'AI Cluster' and "AO Cluster' are updated with the values from **AnalogInOutConfig.vi.**

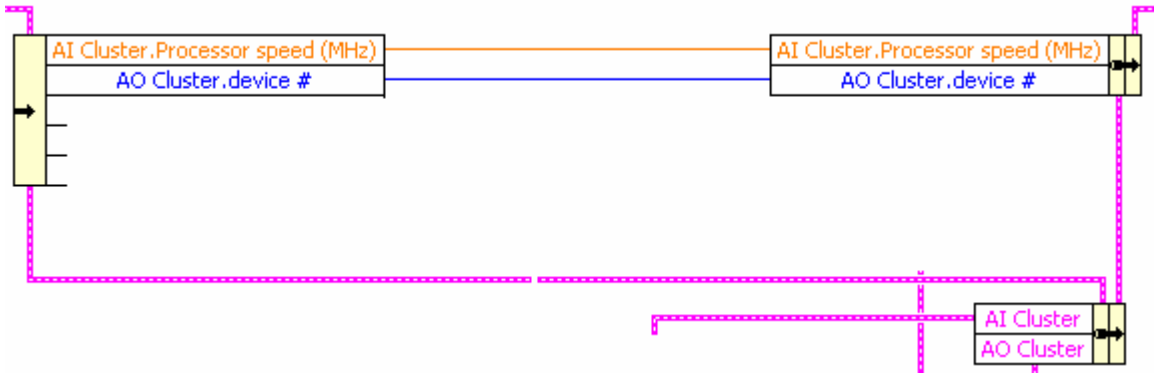

2. The final step in G-clamp initialization is the synchronization of date and time between host computer and PXI controller. This is done by using a *Call By Reference Node* to execute **Embedded.llb/SetTimeDate.vi** on the PXI controller while at the same time providing it with the current host computer date and time as start parameters.

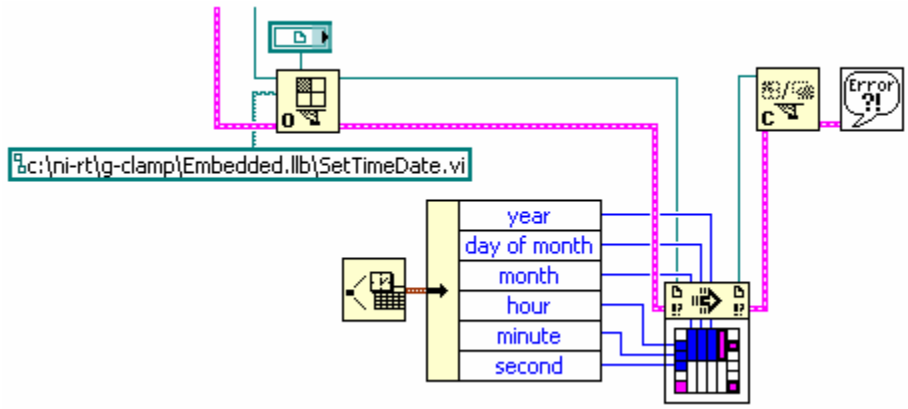

To use a *Call By Reference Node*, *Open VI Reference* has to be provided with a *VI Refnum* control. The *VI Refnum* control acts as a type specifier so that the *Call By Reference Node* can take on a pattern of input and output connectors identical to the connector pane of the VI to be called[7].

For more information about **SetTimeDate.vi** see section 10.3.

4.1.3 Check Controls

This is the default case that executes whenever the queue is empty. The central element in this case is an *Event Structure*, which handles 4 different kinds of user interactions with front panel elements in 5 of its 6 cases:

1. 'Clear Graph' clears the graph in the 'Synaptic Gain' page by providing its 'Value' property with an empty array. The empty array also resets 'fpre' and 'Gain', two controls used as temporary data buffers and accessed here via *Local Variables*.
2. Menu Selection (User) handles selections made from the G-clamp run-time menu. A *Match Pattern* first determines whether a selection has been made from the menu item 'Function'. If this is the case, the front panel window title of **G-clamp.vi** is updated to reflect the chosen experiment module, the variable 'Exp Type' is updated accordingly and the queue is provided with the string 'Enable/Disable Controls'.

[7] An easy way to specify the correct type is to right-click while pointing on the *VI Refnum* control, select 'Select VI Server Class > Browse…' and to choose the VI that is to be called by the *Call By Reference Node*. Keep in mind that any change in the connector pane of the called VI requires a new type specification of the *VI refnum* control.

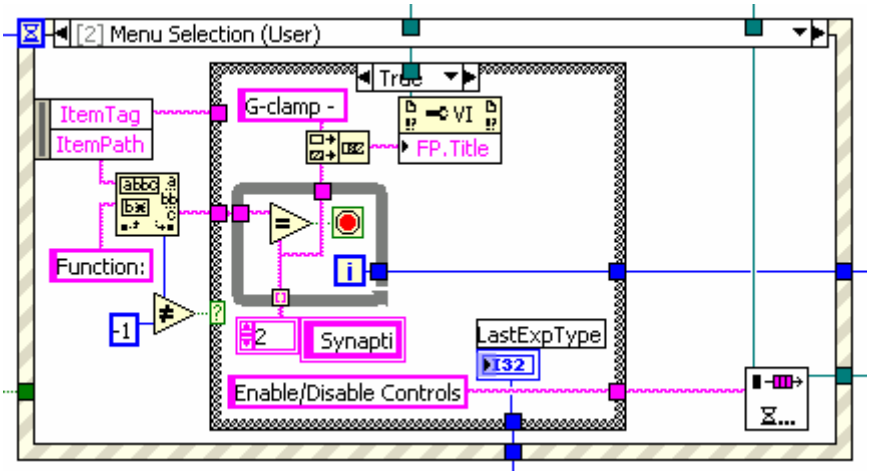

If the selected menu item does not reflect a change in experiment module, the menu item tag is fed into the queue[8], causing the case with the same name as the menu item to be executed later.

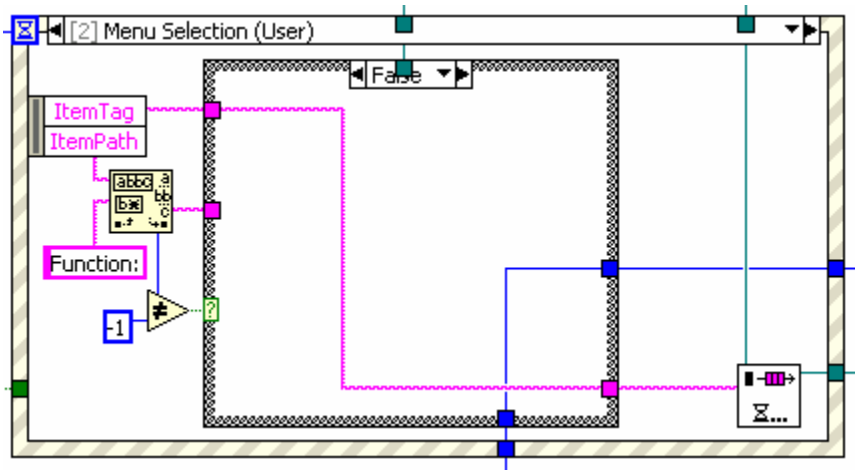

3. 'SelectTemplate', 'DeselectTemplate' feeds the string 'Selection Modified' into the queue whenever a template gets selected or de-selected on the 'Templates' page.
4. 'start/stop' reacts to the 'Start F12' button and provides the queue either with a string causing the start of an experiment or its abortion.
5. 'IV Relation' reacts to mouse-up events in the graph on the IV Relation page. A mouse-up event in this graph is dragging one of the cursors to a new position. The only action of this case of the Event Structure is to calculate the leak resistance.

[8] Custom run-time menus can contain user-defined menu items and standard LabVIEW menu items (= application items). Application items used in a custom run-time menu require no additional programming as they behave in the same way as in the standard LabVIEW menu.

This is done by using the property 'Cursor Position:Cursor X' and 'Cursor Position:Cursor Y' to obtain the cursor coordinates[9] and thus the endpoints of the line for which the slope (i.e. leak resistance) is calculated.

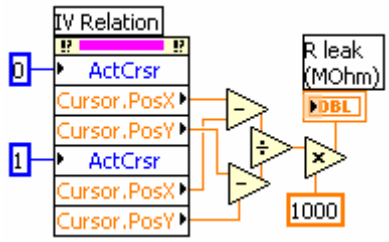

6. The Timeout-case does not effect anything and serves only as a means to exit the *Event Structure* without waiting indefinitely for a user event.

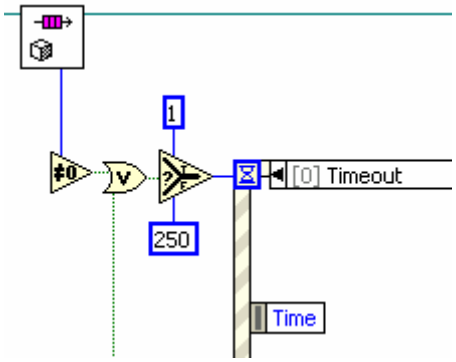

The time-out value for the *Event Structure* is dependent on the state of G-clamp: If the queue already contains elements (checked by **Get Queue Status.vi**) or if the Boolean variable 'DAQ in process?' indicates an ongoing experiment, the *Event Structure* waits only 1 ms for a user event, thus allowing the pending actions to proceed quickly (If a data acquisition is in process, the queue receives the string 'New Data?!' after the *Event Structure* has completed).

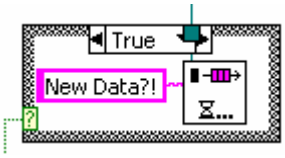

Otherwise the *Event Structure* waits for 250 ms.

4.1.4 Enable/Disable Controls

This case executes after a change of the experiment module to make those controls necessary for the module visible and enabled while disabling or making invisible

[9] This works because the cursors in the IV Relation graph are set up as 'Snap to point', i.e. wherever they get dragged by the user their x and y coordinates always snap to the closest data point.

unneeded controls. Thus this case mainly sets the property 'Disabled' and the property 'Visible' of many controls to new values. For many controls these settings are stored in an array of clusters with one array element (cluster) containing the settings specific to one experiment module. The correct cluster is obtained by an *Index Array*, which uses the variable 'Exp Type' (set in the 'Menu Selection (User)' case of the Event Structure in the default case "Check Controls") to index the array.

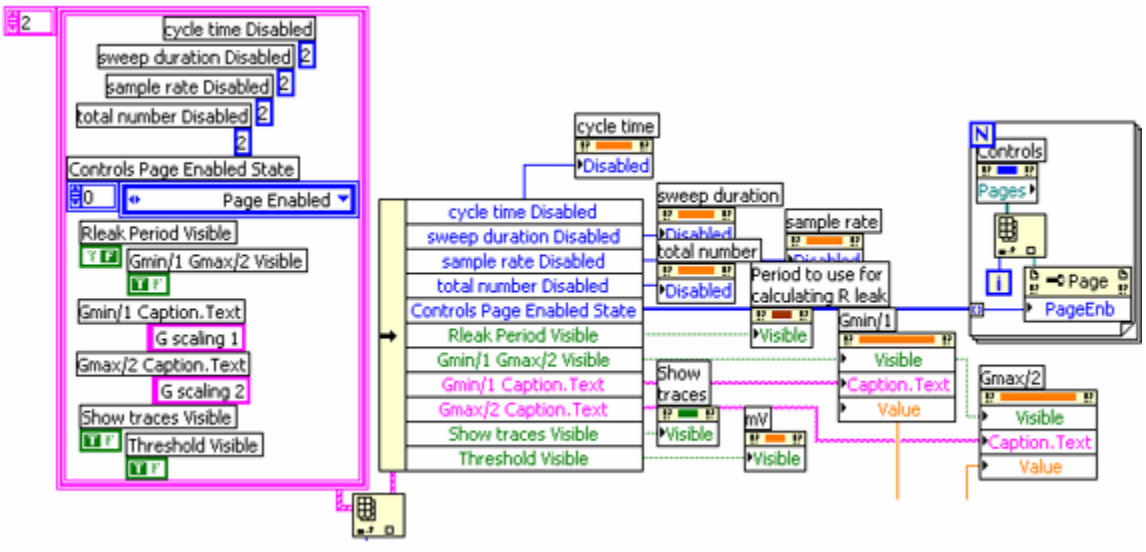

Other experiment module-specific control properties that are set by the user (the cluster of controls in the right part of the 'Settings' page which also contains hidden controls to buffer the values of the controls 'Gmin/1', 'Gmax/2' and 'Available templates') are stored in the 1-D array of cluster 'ControlsBuffer'.

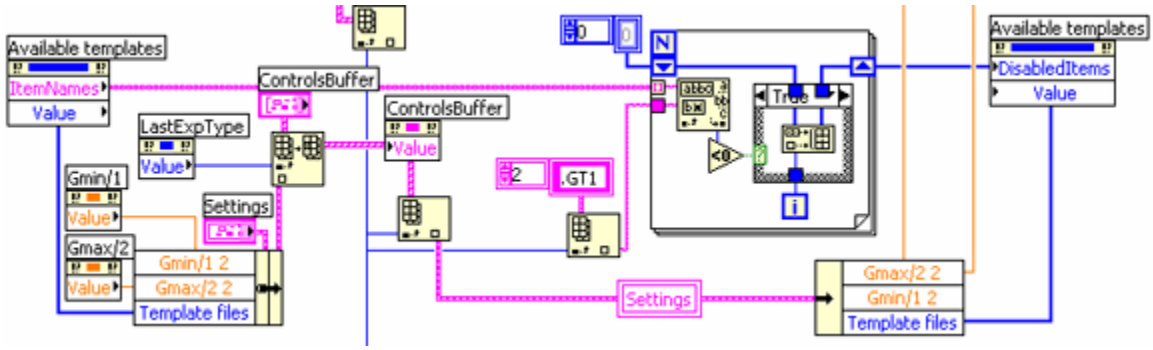

4.1.5 PXI Target

This case is invoked by the menu item 'File > Preferences > PXI Target' when the user wants to change the PXI controller G-clamp targets.

After a type specifier VI Refnum to **Embedded.llb/TargetList.vi** has been obtained, the property 'Front Panel Window:Open' of the VI is set to TRUE. A *Call By Reference Node* is used to execute **TargetList.vi**, causing **G-clamp.vi** to wait until the user is finished selecting a PXI controller and **TargetList.vi** stops. The *Call By Reference Node* connector output 'PXI Target' is then used to update the corresponding element of the large cluster that is passed from one iteration of the outer *While Loop* to the next via the top shift register. Closing the VI reference does not close the front panel window of **TargetList.vi**. Thus the VI and changes to its controls made by the user remain in memory. After a new type specifier VI Refnum to **Embedded.llb/TargetList.vi** is obtained[10], the method 'Make Current Values Default' is invoked and these changes to default values are made permanent by saving the VI with the method 'Save Instrument'. Finally the front panel window of **TargetList.vi** is closed and by closing the VI reference the VI is removed from memory.

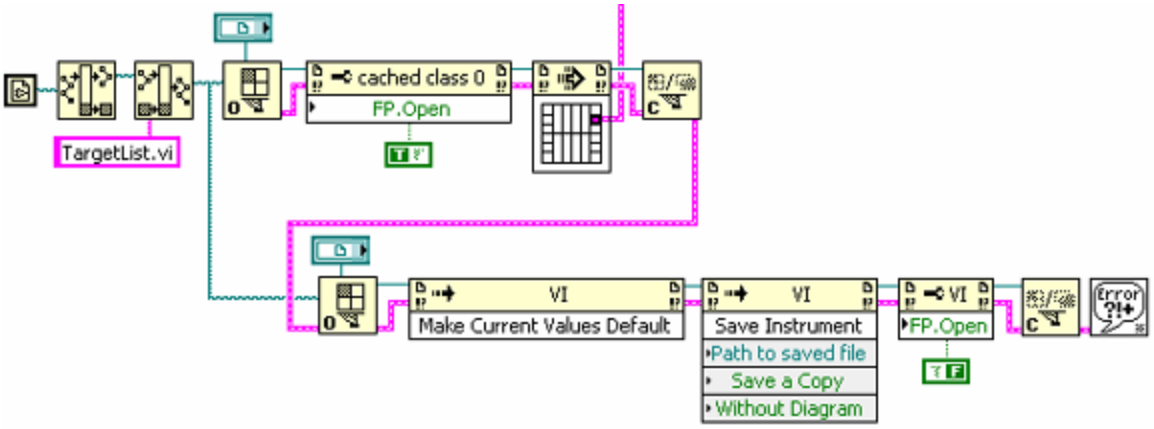

Selecting a new PXI controller for G-clamp requires re-initialization of **G-clamp.vi**. Thus the queue is provided with the string 'Initialize'. As 'Initialize' will create a new application reference to the LabVIEW RT Engine on the newly selected PXI controller, the old target application reference is closed.

[10] The first type specifier VI Refnum control is set to the VI server class 'Strictly typed VI'. This VI server class can not invoke the method 'Make Current Values Default'. Therefore the second specifier VI Refnum control is set to the more general VI server class 'VI'.

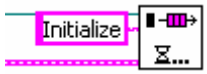

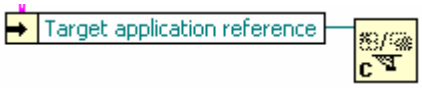

4.1.6 DAQ Board Configuration

This case is invoked by the menu item 'File > Preferences > DAQ Board Configuration' when the user wants to change the settings for the analog-input or analog-output channels used.

This case operates analogous to the previously outlined case 'PXI Target' using **Embedded.llb/AnalogInOutConfig.vi** (section 4.1.5 PXI Target).

4.1.7 Selection Modified

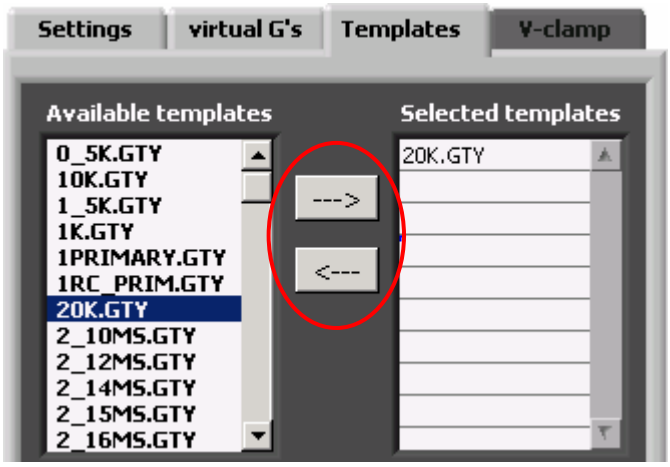

This case is executed after using one of the two front panel controls for selecting or deselecting a template. Because the two controls are associated with the same event-case of the *Event Structure* in the default case 'Check Controls' (see section 4.1.3) and because they have opposing effects, it is sufficient to query only one ('SelectTemplate') of the two controls in the 'Selection Modified' case.

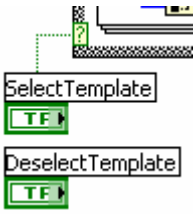

The control 'Available templates' is a *Listbox* control whose output is a 1-D array of long integers (I 32) with each number reflecting the index of the currently selected item(s). The indicator 'Selected templates' is a *Table* indicator whose output is a 2-D array of strings (only the first column of the table is visible).

- Selecting a template: The 'Value' property of 'Available Templates' is used to index the 1-D array of strings which is the control's property 'Item Names' (1). The resulting 1-D array is appended (concatenated) to a 1-D array containing the templates that had been selected earlier and that are visible in the indicator

'Selected templates' (2). This 1-D array has been obtained by using *Reshape Array* to convert the 2-D array reflecting the 'Value' property of the indicator 'Selected templates' (which contains elements only along one dimension, i.e. the first column) into a 1-D array (3). Lastly, the concatenated 1-D array is converted back into a 2-D array using a *Build Array* to update the 'Value' property of 'Selected templates' (4).

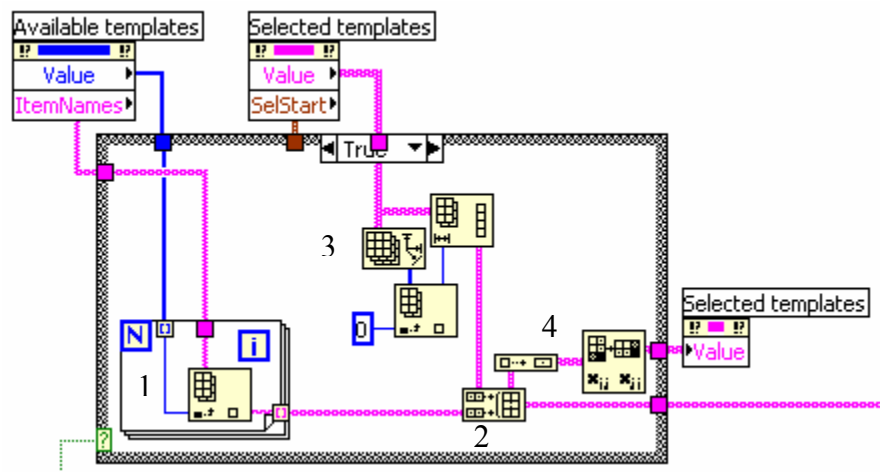

- De-selecting a template: The property 'Selection Start' of the indicator 'Selected templates' contains the row and column index of the beginning of the data selection. The row index is obtained with an *Unbundle* and used at the row index input (index 0) of a *Delete From Array*. *Delete From Array* takes the 2-D array that is the 'Value' property of 'Selected templates' (containing elements only along one dimension, i.e. the first column) and because its disabled column index input (index 1) it deletes one (1 at length input) complete row.

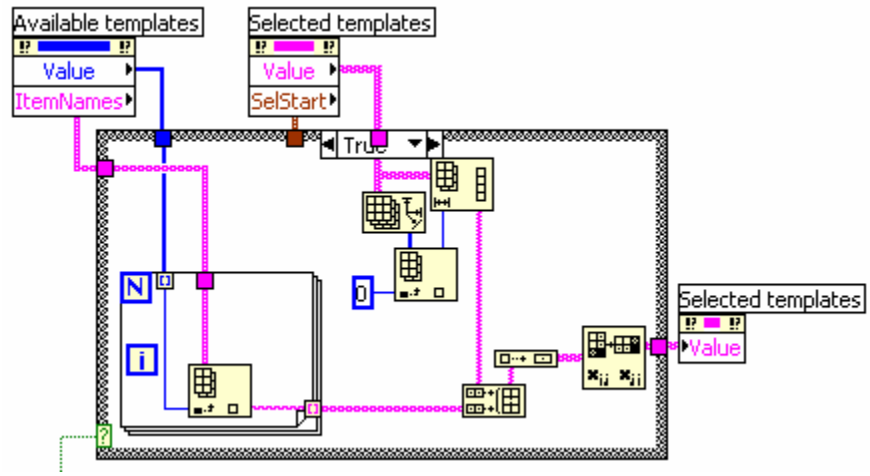

4.1.8 Start ExpModule Step1

This case is preparatory and precedes the actual start of a data acquisition ('Start ExpModule Step2').

- It transfers the values of several controls to corresponding elements of the large cluster that is passed from one iteration of the outer *While Loop* to the next via the top shift register.
- To free memory on the host computer it clears several data buffers and the trace display by feeding them empty inputs.
- In case of the Gsyn Threshold and the Synaptic Gain module, it checks whether a template has been selected. On this condition rests whether execution will proceed with the 'Start ExpModule Step2' case.

4.1.9 Start ExpModule Step2

This case uses the application reference to the LabVIEW RT Engine on the PXI controller[11], which had been obtained in the 'Initialize' case to open a VI reference to the experiment module VI. It then invokes the method 'Set Control Value' to provide the experiment module VI with all the user-specific settings required for execution of the experiment module. This process will be explained in more detail below. It next starts the experiment module VI by invoking the method 'Run VI' with the parameter 'Wait until done' set to FALSE. This allows code execution of **G-clamp.vi** to proceed without waiting for the experiment module VI to finish. Lastly it uses *Open TCP Connection* to establish a TCP connection with the experiment module VI that will serve to transfer the acquired data from the experiment module VI on the PXI controller to **G-clamp.vi** on the host computer. If all these actions occurred without an error, i.e. the 'status' variable of the error cluster is FALSE, a string ('Send Control Values'[12]) is fed into the queue. Because no case 'Send Control Values' exits, the default case 'Check Controls' will

[11] This is the reason why after a re-boot of the PXI controller **G-clamp.vi** also has to be re-started: Re-booting the PXI controller makes the application reference invalid and **G-clamp.vi** has to obtain a new one.
[12] This is a leftover from a former case 'Send Control Data'. Any string, including an empty string, could be used here to force execution of the default case 'Check Controls' next.

execute next. With the variable 'DAQ in process?' now TRUE (= *Not* FALSE), the queue will be provided in 'Send Control Values' with a string directing it to the case that checks for the availability of new data ('New Data?!').

Transferring experiment parameters to the experiment module VI:

Related parameters (mostly derived from the large cluster that is passed from one iteration of the outer *While Loop* to the next via the top shift register) are bundled together in an array or a cluster that is then converted to the LabVIEW data type variant. In the *Case Structure* all variants relevant to the selected experiment module are then assembled into a 1-D array, which is used to auto-index (together with a 1-D array of strings representing the control names) the *For Loop* in which the method 'Set Control Value' is invoked on the experiment module VI.

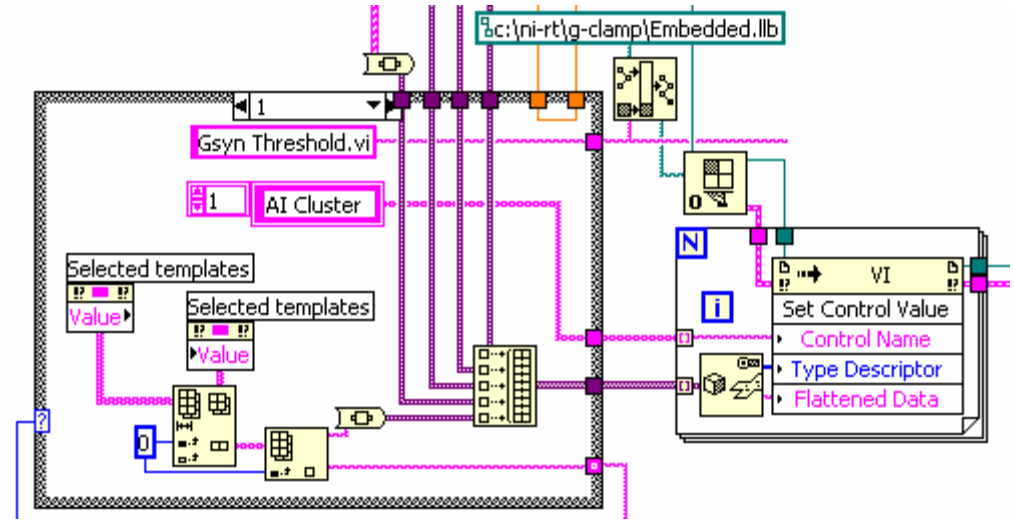

While this scheme requires converting the parameters back into their original data types in the experiment module VI, it offers a flexible way to deal with different types and numbers of parameters required for different experiment modules:

- Changes to the number of elements in a cluster or array of related parameters are taken care of automatically by the data type conversion to variant.
- Re-sizing the *Build Array* function and exploiting the auto-indexing of the *For Loop* adjusts to changes in the number of variants.

4.1.10 Start Failed

Closes the TCP connection and the reference to the experiment module VI if an error occurred in the 'Start ExpModule Step2' case.

4.1.11 New Data?!

Uses the first *TCP Read* to check whether data are available on the TCP connection. If nothing is sent via the TCP connection, *TCP Read* times out after 1000 ms and the error status of the 'error out' cluster of *TCP Read* is TRUE. The empty TRUE-case of the large *Case Structure* executes and in the TRUE case of the small *Case Structure* the error code is analyzed: Error code 66 indicates that the TCP connection was closed by the peer, i.e. the experiment module VI. As the experiment module VIs close the TCP connection only after they have finished transmitting data to **G-clamp.vi**, error 66 indicates that the data acquisition is over, the experiment module VI has stopped and the 'Stop' case of **G-clamp.vi** should be executed next. If the error code is not 66, it is assumed that TCP Read simply timed out, i.e. the experiment module VI is running but not sending data right now. In this case the 'Check Controls' case will execute next. Thus during an experiment it takes up to 1000 ms before **G-clamp.vi** reacts to a user interaction on the front panel. Because of the TRUE-status of the variable 'DAQ in process' (after handling the user events) execution will return to the 'New Data?!' case as long as the TCP connection is open.

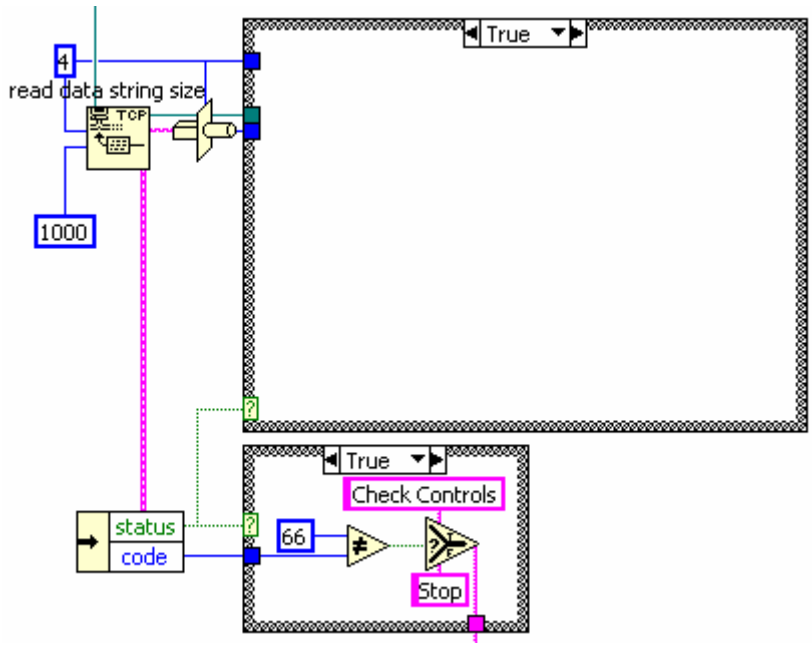

If data are received, the first *TCP Read* reads 4 bytes. The *Type Cast* function is used to convert the string output of *TCP Read* into a long integer (I 32). This number gives the number of bytes to read with the second *TCP Read*. The string output of the second *TCP Read* is *Type Cast* into a 1-D array of single precision numbers (SGL). Because each experiment module VI sends two blocks of data with identical structure (see section 4.1.13 Process for details), the output of the third *TCP Read* is actually not needed because the output of the first *TCP Read* is used again to set the number of bytes to read for the last *TCP Read*. The output of the last *TCP Read* is also converted to a 1-D array of SGLs and both arrays are combined to a 2-D array and temporarily stored in the hidden indicator 'Waveform Graph'. Finally, the small *Case Structure* directs **G-clamp.vi** to the case 'Process', in which the received data will be processed and analyzed.

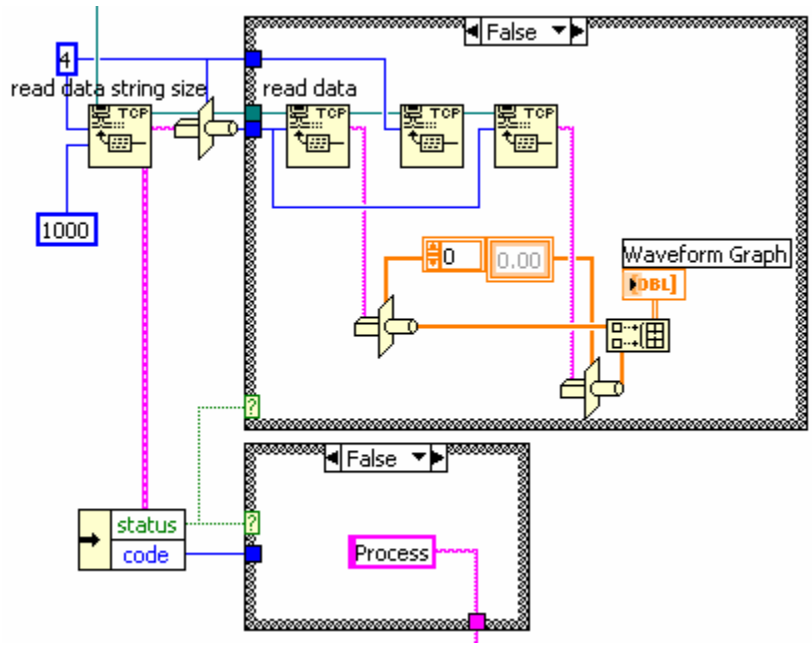

4.1.12 Abort

0. Uses the TCP connection and *TCP Write* to send the running experiment module VI a Boolean TRUE *Type Cast* to a string (of 1 byte) causing it to abort the ongoing data acquisition[13]. This works only with experiment module VIs that perform a series of repetitive data acquisitions, i.e. iterations, as the corresponding *TCP Read* in the experiment module VI is located in the *While Loop* that runs parallel to the RT feedback loop module in these VIs and that sends data to **G-clamp.vi** in between iterations.

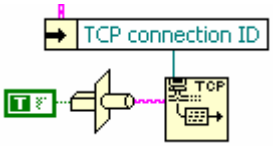

1. It uses **Flush Queue.vi** to empty the queue and then inserts the string 'Stop'.

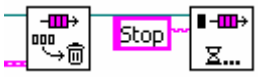

2. It clears the indicator 'Selected templates' by setting its property 'Value' to an empty 2-D array.

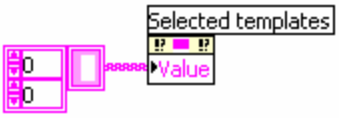

[13] Because of the unwired timeout input, *TCP Write* times out after the default 25.000 ms. This means that in situations in which the *While Loop* in the experiment module VI needs more than 25.000 ms for an iteration, the Abort-command goes unnoticed.

4.1.13 Process

This case processes and displays the data sent by the experiment module VI in a *Case Structure*, which has one case for each experiment module with code-intensive processing split into different frames of *Sequence Structures*.

The processing logic of the data is the same in each experiment module case and will first be illustrated using the IV Relation case. Second, experiment module-specific differences will be explained.

1. General outline of data processing

   The data to be processed are read out from the 'Value' property of the hidden indicator 'Waveform Graph'. As described in section 4.1.11 ('New Data?!'), 'Waveform Graph' contains two rows of data assembled from two consecutive transmissions via the TCP connection between the experiment module VI and **G-clamp.vi**. The first row of data in 'Waveform Graph' represents the voltage trace recorded by the experiment module preceded by a header containing additional information about the experiment. The second row of data contains the recorded current trace preceded by an identical copy of the header used with the voltage trace.

   1. Thus the first task in processing the received data is to separate the trace from the header and to extract the information contained in the header. This is done in a *For Loop*, which uses auto-indexing of the 2-D array of DBLs to set the number of iterations and to separate the two sets of data. *Index Array* is then used to obtain individual values from the header. The data set is then reduced with an

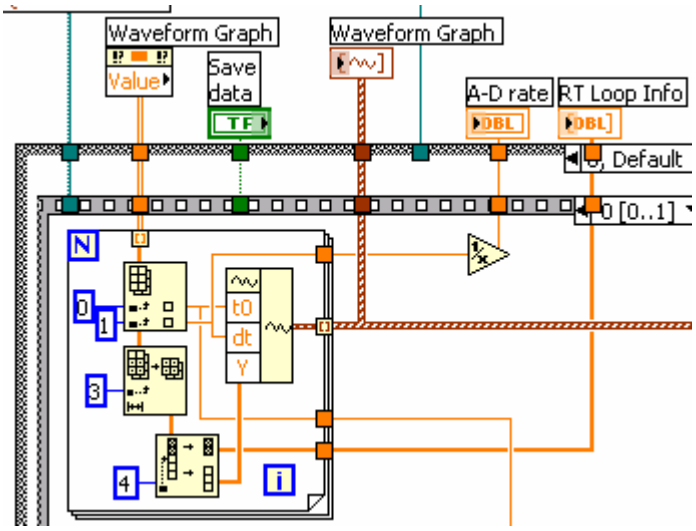

Array Subset that chops off the leading portion of the data set. The output of *Array Subset* consists of the rest of the header plus the trace. The remaining header consists of information that is used in the form of a 1-D array. Thus a *Split 1D Array* can be used to separate this part of the header from the trace. The 1-D array of DBLs representing the trace is then converted to the LabVIEW data type waveform by feeding it into a *Build Waveform* together with two DBLs representing the time when the trace was recorded (t0) and the time interval between data points (dt) extracted from the header. Using auto-indexing for the output of the *For Loop*, the voltage and current waveforms are assembled into a 1-D array of waveforms, which feeds directly into the waveform graph indicator 'Waveform Graph' on the front panel to display the two traces. All other header information extracted twice in the *For Loop* exits the *For Loop* without auto-indexing.

Note that the content of the header and its size differ between experiment modules. Therefore the arrangement of operations performed in the *For Loop* varies somewhat between the experiment module-specific cases of the *Case Structure* in 'Process'. (The case for the Synaptic Gain module differs even more as in this module transfer of the recorded traces to the host computer is optional – see 'Synaptic Gain' under 'Experiment module-specifics' below) All headers contain – although at different positions within the header – the true sample interval (going through a *Reciprocal* and fed into the front panel indicator 'A-D rate') and the RT loop performance information (fed into the front panel indicator 'RT Loop Info').

2. The 1-D array of waveforms containing the voltage and current trace is added as new element to a 2-D array of waveforms that is buffered in the hidden waveform indicator 'Output Array'. After the experiment module VI has finished executing, this buffer serves as the source for displaying all acquired traces in the front panel waveform graph (see section 4.1.15 Plot all) and optionally for saving the data to a file.

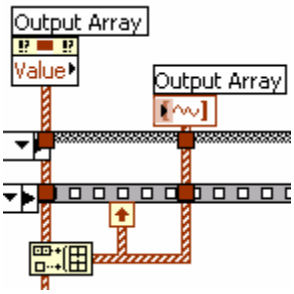

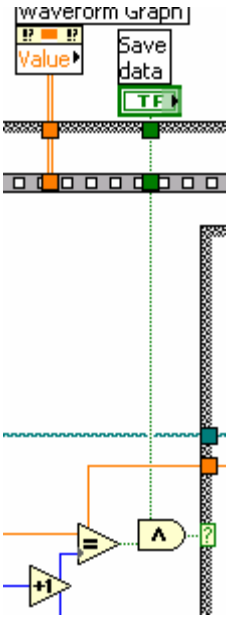

3. Data are written to file if two conditions are TRUE: The front panel control 'Save data' is set to TRUE <u>and</u> the experiment module VI has performed the user-specified number of iterations. Thus data to be saved accumulate in temporary buffers until the end of the experiment. Also, while the control 'Save data' is read out each time the 'Process' case executes, it matters only at the end of the experiment when the last set of data is processed.

Filenames for the data file are created by the sub-VI **GetDatafileName.vi** in the TRUE-case for saving data. **GetDatafileName.vi** uses the *Get Date/Time In Seconds* function to get the current time when it executes. Date and time are converted to a string, which includes the proper file type extension for the selected experiment module using *Format Date/Time String*. Thus date and time in the file name reflect the end of the experiment.

2. Experiment module-specifics

- <u>IV Relation:</u>

The operations necessary to obtain the relation between injected current and membrane potential are straightforward and easy to figure out. The two 1-D arrays of DBLs 'Voltage' and 'Current' provide the xy-graph 'IV Relation' with input and serve as buffers before the data get saved to file. 'Voltage' and 'Current' are re-initialized in the 'Start ExpModule Step1' case with an empty array. Calculation of the leak resistance is done in the 'IV Relation' case of the *Event Structure* in the case 'Check Controls', i.e. whenever the user moves the cursors in the xy-graph.

Structure of the 1-D array of DBLs 'Waveform Graph':

- index 0: start time of the trace acquisition, coded as seconds elapses since 12:00 AM

  - index 1: reciprocal of the actual sample rate (Hz) of the analog input operation
  - index 2: not used, set to zero
  - index 3 – 6: RT loop performance information
  - index 7 – n: voltage and current trace, respectively

- Gsyn Threshold:

  The scaling factor used with the last received set of traces is fed into the numerical indicator 'G-scaling' and into the waveform chart 'Gsyn ThresholdChart'. History length of 'Gsyn ThresholdChart' is set to 100 data points. The 1-D array of DBLs 'G's' serves as a buffer for the scaling factors before they get saved to file and is re-initialized in the 'Start ExpModule Step1' case with an empty array.

  Structure of the 1-D array of DBLs 'Waveform Graph':

  - index 0: start time of the trace acquisition, coded as seconds elapses since 12:00 AM
  - index 1: reciprocal of the actual sample rate (Hz) of the analog input operation
  - index 2: factor used for scaling the conductance template
  - index 3 – (n – 4): voltage and current trace, respectively
  - index (n – 3) – n: RT loop performance information

- Synaptic Gain:

  The two 1-D arrays of DBLs 'fpre' and 'Gain' provide the xy-graph 'Gain' with input and serve as buffers before the data get saved to file. 'fpre' and 'Gain' are re-initialized with an empty array in the 'Clear Graph' case of the Event Structure in the 'Check Controls' case, i.e. by the user with the control 'Clear Graph'.

  Because of the long templates possible with this experiment module, a) transmission of voltage and current trace to the host computer is optional and done via a separate TCP transmission in the 'Process' case and b) saving of the traces to file occurs on the PXI controller while analysis results are saved in a separate file on the host computer.

The two transmissions in the 'New Data?!' case are used for header information only and each of the two transmissions has different content. The 2-D array of DBLs 'Waveform Graph' thus has the structure:

- index 0; 0: mean presynaptic activity rate fpre (Hz)
- index 0; 1: gain
- index 0; 2: ending time of the trace acquisition, coded as seconds elapses since 12:00 AM
- index 0; 3: reciprocal of the actual sample rate (Hz) of the analog input operation
- index 1; 0 – 3: RT loop performance information

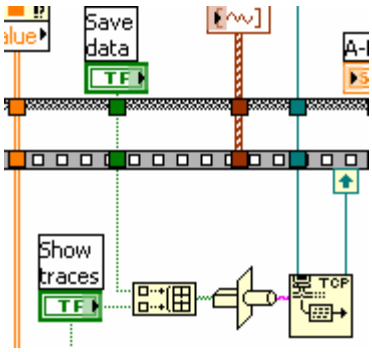

To instruct **Synaptic Gain.vi** to save the traces to file and/or transmit the traces for display to **G-clamp.vi**, the two Booleans 'Save data' and 'Show traces' are assembled into an array and after flattening to string sent with the *TCP Write* function.

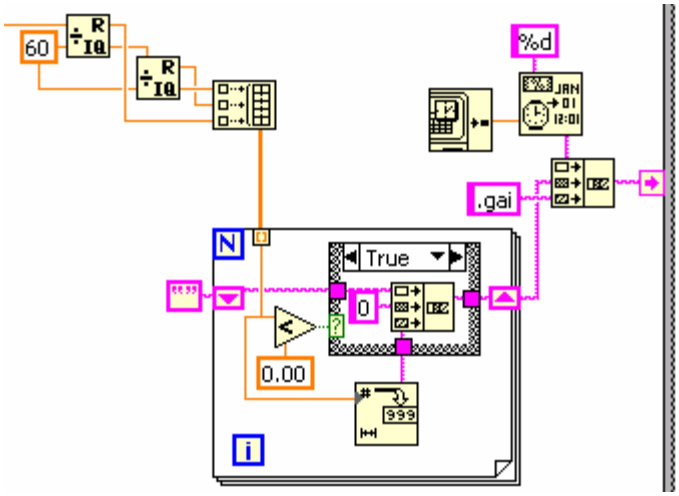

To have identical file names for the data file saved on the PXI controller and the host computer, the ending time (coded as number of seconds since midnight) of the trace acquisition as determined by the PXI controller is used on both computers. The missing day of month information is obtained with a *Get Date/Time In Seconds* and a *Format Date/Time String*.

Trace transmission: With each iteration of the outer *For Loop* one of the two traces is received via the TCP connection. Transmission of the traces is broken into smaller segments, thus allowing the user to monitor progress via the 'Status'

indicator. The initial *TCP Read* in the outer *For Loop* serves to receive information about the number of segments to expect next and to set the count terminal of the inner *For Loop*. The inner *For Loop* works in the same way as data transmission in the 'New Data?!' case: The first *TCP Read* receives information about the number of bytes to read with the second *TCP Read*, i.e. the segment length. Each received segment is immediately unflattened from string and appended to a 1-D array of SGLs, which uses a shift register to maintain its content from one iteration of the inner *For Loop* to the next. After a trace has been received completely, the 1-D array of SGLs is converted to a waveform and a 1-D array of waveforms is obtained using auto-indexing of the output of the outer *For Loop*.

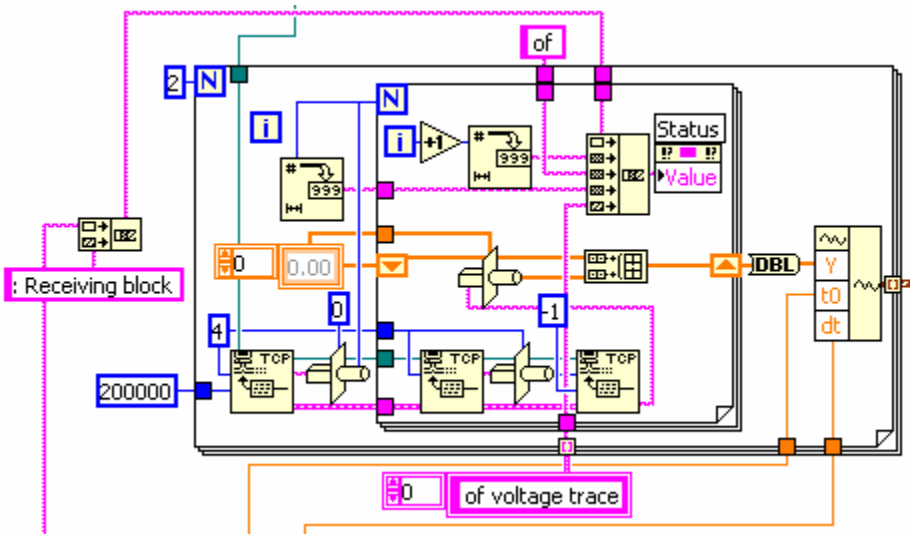

- <u>V-clamp:</u>

  Structure of the 1-D array of DBLs 'Waveform Graph':

  - index 0:start time of the trace acquisition, coded as seconds elapses since 12:00 AM
  - index 1: reciprocal of the actual sample rate (Hz) of the analog input operation
  - index 2: not used, set to zero
  - index 3 – (n – 4): voltage and current trace, respectively
  - index (n – 3) – n: RT loop performance information

Each experiment module has its own data file format. These are documented in the G-clamp User Manual.

4.1.14 Stop

- Closes the TCP connection and the reference to the experiment module VI.
- Adds a 'Plot all' to the queue if more than 1 iteration has been performed.
- Adds a 'Start ExpModule Step1' to the queue if two conditions are fulfilled:
    - 'Selected templates' is not empty and
    - the current experiment module is Gsyn Threshold or Synaptic Gain.
- Sets the variable 'DAQ in process?' to FALSE and thus stops the default case 'Check Controls' from adding a 'New Data?!' to the queue.

4.1.15 Plot all

Replaces the last set of acquired traces visible in the front panel waveform graph 'Waveform Graph' with the contents of 'Output Array' which acts as buffer for all acquired traces. Because 'Output Array' is a 2-D array and 'Waveform Graph' a 1-D array, the traces have to be re-organized: In the resulting 1-D array the first half of elements are the voltage traces and the second half of elements are the current traces. In the following *For Loop* the first half of traces (plots) is assigned to left (voltage) y-scale of 'Waveform Graph' and the second half of plots to the right (current) y-scale. In addition, each current trace is given the same color as its corresponding voltage trace. These operations result in constant updating of the front panel display, which can be annoyingly slow and time-consuming, even with relatively small data sets. To speed up this process, Auto-scaling of the x-axis is disabled during these operations and minimum and maximum of the x-axis of 'Waveform Graph' are set to display only a fraction of the actual data and after all plot-operations have been performed the x-axis is set back to its original range.

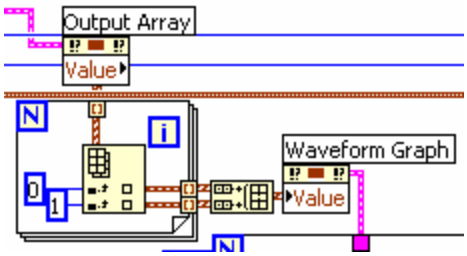

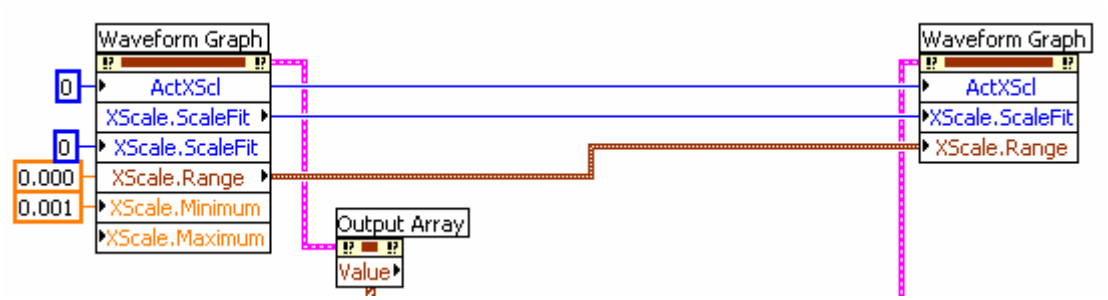

4.1.16 Exit

Saves the current settings for the virtual conductances so that these settings can be used at the next start of **G-clamp.vi**. This is done by invoking the method 'Set Control Value' on the control 'Virtual G's' of **Embedded.llb/SaveConfig.vi** and then invoking the 'Run VI' method with the parameter 'Wait until done' set to TRUE. After the VI reference to **SaveConfig.vi** has been closed, the reference to the LabVIEW RT Engine on the PXI controller is closed.

If the 'Exit' command was given while an experiment was in progress, the queue receives the string 'Abort' followed by the string 'Done', otherwise only the string 'Done'.

4.1.17 Done

Closes the VI reference to itself and destroys the queue. Besides selecting the 'Done' case, the output of **Remove Queue Element.vi** also stops the outer *While Loop*, thus terminating **G-clamp.vi**.

5 An exemplar experiment module: IV Relation.VI

IV Relation.vi, **Gsyn Threshold.vi** and **V-clamp.vi** each perform a series of data acquisitions (iterations) and therefore these three VIs have essentially the same structure consisting of 2 processes that operate in parallel: A communication loop transfers data to and receives commands from the host computer via a TCP connection and the real-time feedback loop as the central component of the dynamic clamp. From the wiring diagram of **IV Relation.vi** the communication loop is immediately recognizable as the large *While Loop*. The real-time feedback loop is implemented as a sub-VI (**G-clamp DQA.vi**) in **IV Relation Sub.vi** in the *Sequence Structure* below the *While Loop*. Data acquired by the real-time feedback loop are transferred to the communication loop via the RT FIFO queue 'Result Data Queue', while the RT FIFO queue 'Control Values' serves to provide **IV Relation Sub.vi** and the real-time feedback loop with the essential experiment parameters (for general information about RT FIFOs see section 10.1).

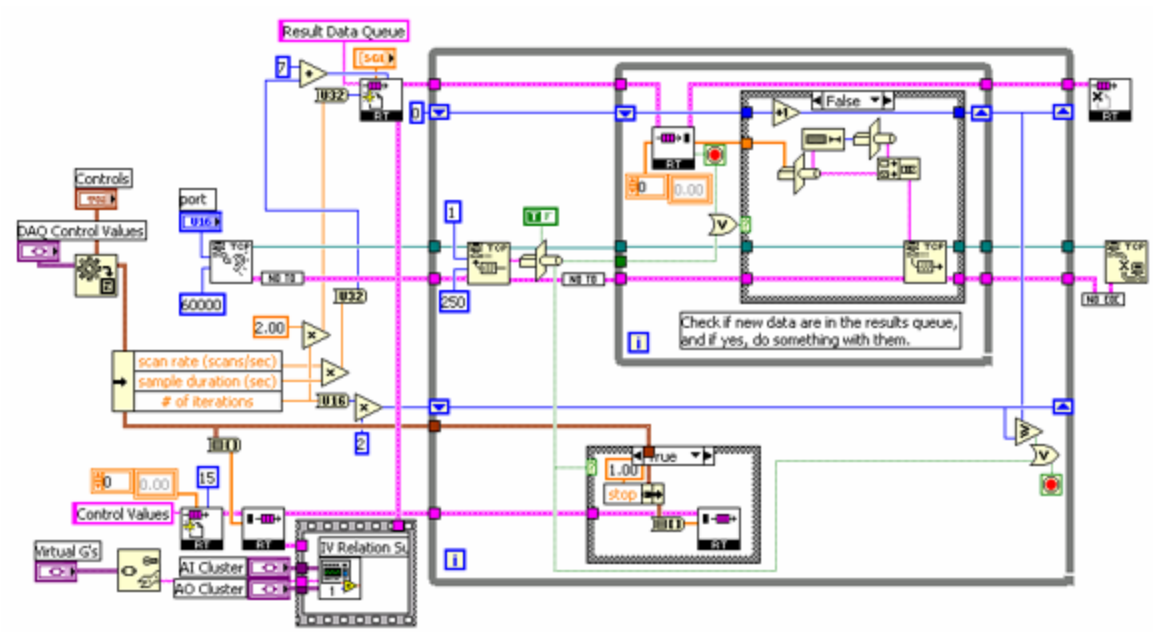

Before **IV Relation.vi** actually starts running, the calling VI **G-clamp.vi** sets the variant controls 'DAQ Control Values', 'Virtual G's', 'AI Cluster' and 'AO Cluster' by invoking the method 'Set Control Value' (see section 4.1.9 Start ExpModule Step2).

Once **IV Relation.vi** starts executing, the variant 'DAQ Control Values' is converted to its original data format by providing the *Variant To Data* function with the cluster

'Controls' at its type-input. The parameter '# of iterations' is multiplied by 2 (for the voltage and the current trace) and used to set up the number of elements in the RT FIFO 'Result Data Queue' with each element consisting of a 1-D array of SGLs of length 'scan rate' multiplied with 'sample duration' plus header length (see section 4.1.13 sub-section 2. Experiment module-specifics). Thus the RT FIFO 'Result Data Queue' is capable of storing the complete set of traces that will be acquired during the experiment[14]. The whole cluster obtained from converting the variant 'DAQ Control Values' consists of 15 identical elements, i.e. DBLs and can thus be converted with *Cluster To Array* into a 1-D array of DBLs. This conversion retains the ordering of elements in the cluster and thus makes it possible to read out a specific element from the array with *Index Array*. The 1-D array of DBLs is written to the RT FIFO 'Control Values' which consists of 10 (because 10 is the default value of the unwired size-input of **RTFIFOCreate DBLA.vi**[15]) 1-D arrays of 15 DBLs.

TCP Listen.vi waits for up to 60 sec for **G-clamp.vi** (see section 4.1.9 Start ExpModule Step2) to open a TCP connection on port 2055[16].

After these initialization steps the communication loop and **IV Relation Sub.vi** are ready to start executing[17].

[14] In theory, the RT FIFO could be used to provide the communications loop with individual data points as they are acquired: Instead of using a queue whose elements are 1-D arrays of SGL (i.e. a complete trace), the queue would consist of individual SGLs (i.e. data points). The RT feedback loop would write a new element to the queue during each loop cycle and the communication loop could transmit individual SGLs or assemble a few SGLs into a short TCP transmission. Re-assembling of the SGLs or short stretches of SGLs would be done after reception by G-clamp.vi. With this scheme memory requirement for the RT FIFO and therefore RAM usage on the PXI controller could be much reduced provided that a) the communication loop can read the queue and transmit the data fast enough compared to the speed at which the RT feedback loop writes to the queue and b) the sleep modus for **AI SingleScan.vi** is set to TRUE in **ni-rt.ini** (see section 11.1 AI SingleScan's "sleep mode"; Following the G-clamp installation instructions given in the G-clamp User Manual the sleep modus should be set to FALSE to achieve faster maximum RT feedback loop rates).

[15] For next revision: 10 is unnecessary. Provide a constant of value 1 as input.

[16] For next revision: No **EOC Error.vi** in front of *TCP Close Connection* is unnecessary.

[17] For next revision: The start of **IV Relation Sub.vi** should be made dependent on successfully establishing the TCP connection (and establishing 'Result Data Queue', which would make it possible to set the return existing-input of **RTFIFOCreate DBLA.vi** in **IV Relation Sub.vi** to TRUE instead of the default FALSE).

5.1 Operation of the communication loop

The first process in the loop is to wait up to 250 ms for a TCP transmission from **G-clamp.vi** of a single byte, which is then *Type Cast* to a Boolean. A Boolean TRUE is the signal for **IV Relation.vi** that the user wants to stop the experiment and gave the Abort-command (see section 4.1.12 Abort). *Type Cast* returns a FALSE if *TCP Read* receives nothing and times out. An abort-signal is transmitted to **IV Relation Sub.vi** via the RT FIFO 'Control Values': The 'stop' element of the cluster 'Controls' is set to 1 and after *Cluster To Array* added to the RT FIFO queue.

The smaller *While Loop* within the communication loop performs a read on the RT FIFO 'Result Data Queue'. If the queue has not been empty and if no Abort-command was given the removed queue element (trace) is *Type Cast* to a string, the string length determined and (after conversion to a string) added in front of the trace string and via a *TCP Write* sent to **G-clamp.vi**. For each trace transmitted a counter is incremented to stop the communication loop after all traces have been sent to the host computer.

Note that execution of the communication loop is preempted by the real-time feedback loop, which has the highest execution priority to maintain determinism. Thus transfer of data traces is usually limited to the period in between two data acquisitions (iterations).

5.2 IV Relation Sub.vi

The **…Sub.vi** of an experiment module VI

1. sets up the RT FIFO queues 'Control Values' and 'Result Data Queue'
2. sets up the data acquisition board for the intended analog input and output operations
3. prepares the output signal to the recording amplifier by interpreting the user settings with **Build AO waveform.vi** (or reading a template file with **read gsyn.vi** in **Gsyn Threshold Sub.vi** or interprets the script with **ScriptAnalyzer.vi** in **V-clamp Sub.vi**)
4. calls the RT feedback loop module **G-clamp DQA.vi** to perform a data acquisition (iteration)

5. puts together the acquired traces with a header and adds it to the 'Result Data Queue' so that the communication loop can send it via the TCP connection to the host computer.

As **IV Relation.vi** is designed to perform a series of data acquisitions (iterations), tasks 3, 4 and 5 from the list above are done repetitively in a *While Loop*, while tasks 1 and 2 need to be done only once before the *While Loop* starts.

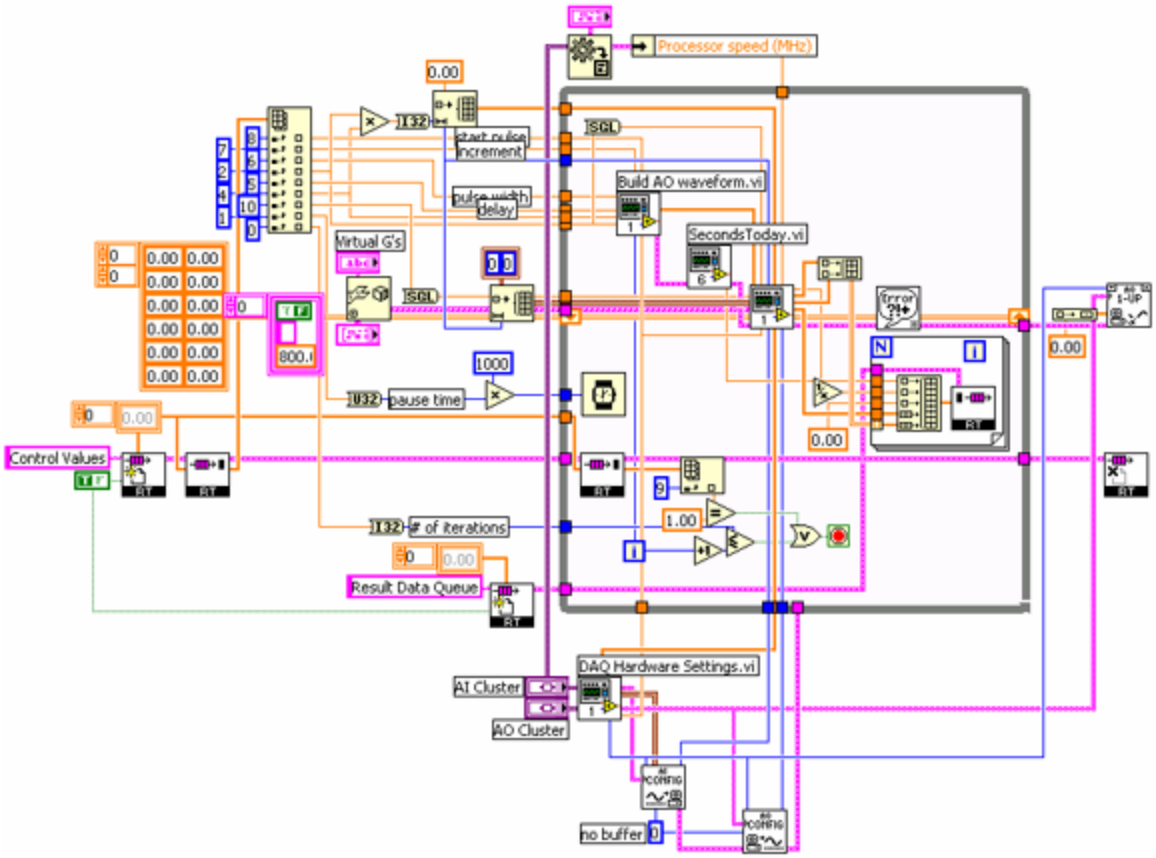

1. **IV Relation Sub.vi** first performs a read on the queue 'Control Values' to obtain the settings for the experiment. Based on these settings

- a 1-D array of SGLs is initialized to pre-allocate memory for the current trace, passed into the *While Loop* and on to the 'Template Im Buffer' input of **G-clamp DQA.vi** (Pre-allocation of memory for the voltage

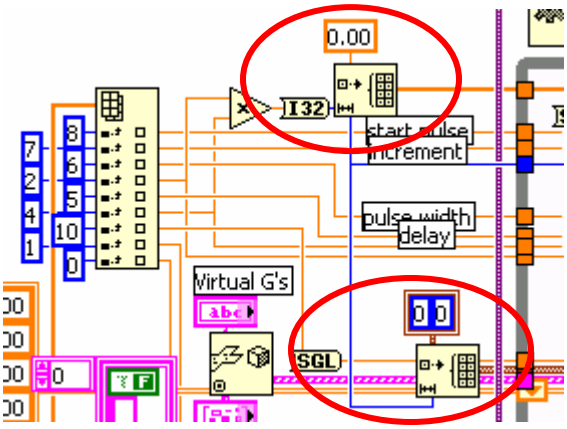

trace is done in the *While Loop* in **Build AO waveform.vi**).

- a 1-D array of cluster of 2 elements (U 32, U 32) is set up for the time stamps obtained during each cycle of the real-time feedback loop from which later the RT loop info is determined.
- the RT FIFO 'Result Data Queue' is set up.

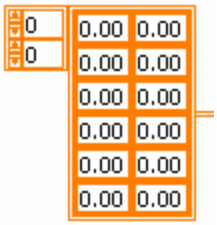

The 2-D array of SGLs contains initial values for the state variables of the activation and inactivation gates of the implemented virtual conductances. This array is fed into the *While Loop* via a shift register. Thus the first call of **G-clamp DQA.vi** starts with the state variables at arbitrary values and it will take some time before the state variables settle to 'normal values'. At the end of each data acquisition, the last values of the state variables are put out from **G-clamp DQA.vi** into the shift register of the *While Loop* and used as the starting values for the next call of **G-clamp DQA.vi**. Note also that the 2-D array is initialized with only 6 rows. If more than 6 virtual conductances are implemented in **V-dependent Conductances.vi** another row has to be added for each additional conductance. Otherwise the retrieval operation in **V-dependent Conductances.vi** will return 'Not a number' and unpredictable results can happen.

2. The analog input and analog output hardware is set up once outside the *While Loop* with **AI Config.vi** and **AO Config.vi**. **DAQ Hardware Settings.vi** provides the required parameters by translating the variants 'AI Cluster[18]' and 'AO Cluster' into the appropriate data types. **AI Config.vi** and **AO Config.vi** provide task IDs for the analog input and analog output operations used in the real-time feedback loop module **G-clamp DQA.vi**. These task IDs are re-used with each data acquisition (iteration of the *While Loop*) as the associated operations are cleared by **G-clamp DQA.vi** at the end of each data acquisition (iteration).

From the variants 'AI Cluster' and 'AO Cluster' **DAQ Hardware Settings.vi** also provides the recording amplifier-specific scale factors for the analog input and output signals to **Build AO waveform.vi** and **G-clamp DQA.vi**.

[18] To use the variant/control 'AI Cluster' to get the info about the processor speed from **G-clamp.vi** to the experiment module VI is not very logical. It's even confusing as it is a hidden element of the cluster control 'AI Cluster'.

3. **Build AO waveform.vi** generates a scaled analog output waveform that will be added to any output signal calculated by the real-time feedback module **G-clamp DQA.vi** due to virtual conductances. Thus the waveform has as many data points as will be acquired by analog input and send out by analog output. The loop iteration count provided by the iteration terminal (i) of the *While Loop* is used by **Build AO waveform.vi** to increment the current step.

4. The RT feedback loop module **G-clamp DQA.vi** acquires one data point at a time, calculates the new command signal for the recording amplifier and outputs it. The operations performed by this VI are detailed in section 5.2.1.

5. After the real-time feedback loop module **G-clamp DQA.vi** has finished executing, the two acquired traces (voltage and current) are assembled into a 2-D array. In a For Loop each trace together with other header information is used to build a new 1-D array (For the exact content of the header see section 4.1.13 sub-section 2. Experiment module-specifics). This new array is then added to the 'Result Data Queue' from which the communication loop reads it and transmits it to **G-clamp.vi** on the host computer[19].

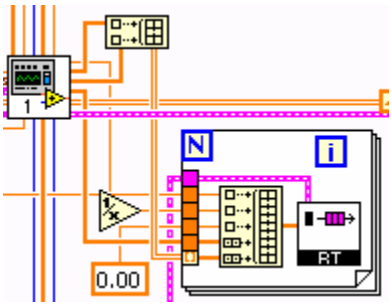

[19] While in **G-clamp DQA.vi** great care has been taken to use only pre-allocated memory buffers of exactly the required size (to avoid invocation of the LabVIEW memory manager and thus avoid violation of determinism) the treatment of the acquired traces here violates this principle: Each use of the *Build Array* function results in a memory duplication and the same is possibly true for the entry nodes of the *For Loop*. A better way would be to pre-allocate buffers of length # of data points + # of header elements. **G-clamp DQA.vi** would place a trace in array elements 0 to trace length – 1. After **G-clamp DQA.vi** a number of *Replace Array Subset* functions would replace the final array elements with the header information (thus in effect changing the header to a tail and requiring a corresponding change in the 'Process' case of **G-clamp.vi**). To get rid of the *For Loop* this would need to be implemented twice, once for the voltage trace and once for the current trace, each followed by its own **RTFIFOWrite SGLA.vi** which would need to be properly chained to preserve the correct alternating order of elements in the queue (voltage trace – current trace – voltage trace- current trace…). On the other hand the use of the *For Loop* auto-indexed by the 2-D array makes it easy to add additional channels for transfer to the host computer.

6. Finally, once the last data acquisition (iteration) is complete and the *While Loop* stops, **AO Write One Update.vi** sets the analog output channel used to 0. This serves as a fail-safe mechanism to prevent a last current command used in the While Loop and different from 0 to persist as command input to the recording amplifier.

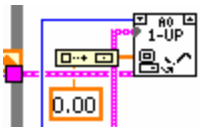

5.2.1 The RT feedback module G-clamp DQA.vi

The task of this module is to read from an analog input channel the membrane potential of the cell under study, calculate the new current value through the virtual conductance(s) and write the current command to an analog output channel. This task is repeated in a *While Loop* for the length of the experiment at the rate specified.

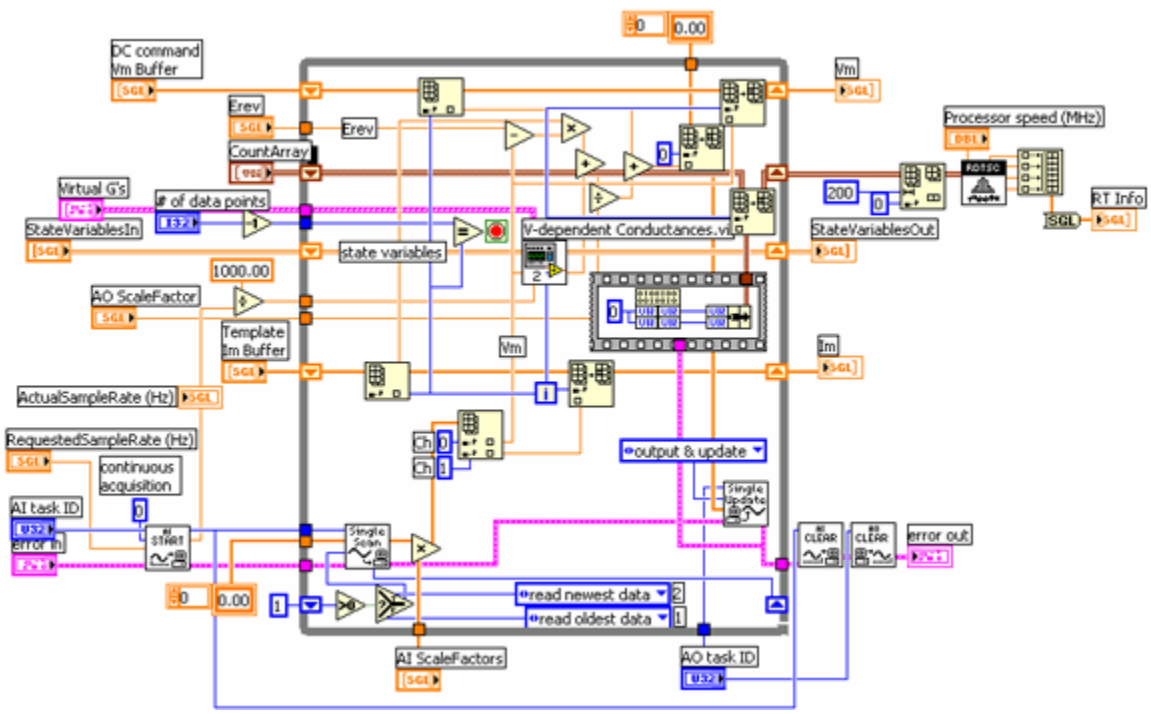

Before the loop starts executing, three operations are performed:

- 1 is subtracted from '# of data points'. This value compared with the current loop iteration count yields the stop-condition for the *While Loop*.
- **AI Start.vi** is called with its 'number of scans to acquire…' input set to 0, indicating continuous data acquisition until the task is cleared with **AI Clear.vi**.
- The 'actual scan rate' output of **AI Start.vi** is converted to sample interval length to provide the 'dt (ms)' input of **V-dependent Conductances.vi**.

Once **AI Start.vi** has been called, the data acquisition board reads the specified analog input channels and performs analog-to-digital conversions at the specified rate. The result of each analog-to-digital conversion is written to an onboard FIFO buffer[20] from which **AI SingleScan.vi** - triggered by the scan clock on the data acquisition board that times the analog-to-digital conversions - retrieves one element at a time. At the first iteration of the *While Loop*, **AI SingleScan.vi** reads the newest data from the FIFO buffer, effectively flushing the buffer of all data that accumulated in it between execution of **AI Start.vi** and the first call of **AI SingleScan.vi**. The 'data remaining' output of **AI SingleScan.vi** indicates now an empty FIFO and gives a 0 which – via a shift register- is used during the next iteration of the While Loop to set the 'opcode' input of to **AI SingleScan.vi** to read the oldest data in the FIFO[21]. Thus 'data remaining' monitors whether the While Loop keeps up with the speed at which the data acquisition board performs analog-to-digital conversions. Even if for some reason the feedback loop transiently lags behind[22], it is able to ignore outdated data and to catch up by flushing the FIFO buffer and using only the newest data.

Note that the 'data in' input of **AI SingleScan.vi** is set to a 1-D array with 2 elements, i.e. an array with the same number of elements as will be put out by **AI SingleScan.vi**. This improves performance of **AI SingleScan.vi** by pre-allocating a block of memory for the data and thus avoiding invocation of the memory manager. The actual values in the 1-D array meaningless and are ignored by **AI SingleScan.vi**.

The raw voltage data obtained from **AI SingleScan.vi** are converted to mV and pA. The two values are stored separately in two 1-D arrays of SGL that had been initialized by and passed to **V-clamp DQA.vi** by its caller **IV Relation Sub.vi**, 'DC command Vm Buffer' and 'Template Im Buffer'. Before the new values are stored in these arrays with *Replace Array Subset*, from both arrays the element at index(current loop iteration count)

[20] For the 16-Bit E Series Multifunction DAQ boards the length of this buffer is 512 samples.

[21] We haven't found anywhere an explanation for why it would make sense to read as often as possible the oldest data and to read the newest data (and flush the FIFO) only when necessary. We presume that reading from the head of the queue is still faster than flushing a queue and obtaining the newest element even if the queue contains only 1 element.

[22] As long as the feedback loop does not lag that much behind that the constant analog-to-digital conversions result in an overflow of the FIFO buffer. In that case, LabVIEW restarts the data acquisition board, effectively canceling the analog input and output operations and thus probably get the *While Loop* stuck indefinitely.

is read out with *Index Array*. The element read out from 'DC command Vm Buffer' corresponds to the next DC current command set up by **Build AO waveform.vi** in **IV Relation Sub.vi** and is summed up with the other currents through virtual conductances calculated in the feedback loop. The element read out from 'Template Im Buffer' is 0 when **V-clamp DQA.vi** is called with the IV Relation module. When the Gsyn Threshold or the Synaptic Gain module uses **V-clamp DQA.vi**, 'Template Im Buffer' contains the conductance template read from file and already scaled by the respective **…Sub.vi**.

While the acquired current value is not used any further and simply stored in the buffer 'Template Im Buffer', the acquired voltage value is used to calculate the driving force for the pre-determined conductance read from a template file and fed into **V-dependent conductances.vi**[23] to calculate the current through any active voltage-dependent virtual conductances. Although analog output is performed on only 1 channel, **AO Single Update.vi** requires a 1-D array of SGL at its 'scaled data' input. To transform the single command value calculated in the loop into the required 1-D array without invoking the memory manager, a pre-allocated (by feeding a constant into the *While Loop*) 1-D array of SGL with only 1 element is used and a *Replace Array Subset* to exchange the constant value with the calculated command value.

Because the 'opcode' input of **AO Single Update.vi** is set to 'output & update', **AO Single Update.vi** sets the analog output channel to the new command value immediately after having received the 1-D array. Thus the delay between acquiring the membrane potential (analog input) and giving the adjusted current command (analog output) depends only on the time it takes to perform the necessary calculations and consequently varies depending on the combination of virtual conductances used. [It is possible to fix the time interval between analog input and analog output by tying **AO Single Update.vi** to the scan clock that controls the analog-to digital-conversions. This is done by replacing **AI Config.vi** and **AO Config.vi** with **AI control config.vi**[24] and **AO control config.vi**[24] respectively. The main difference is that **AI control config.vi** has the ability to route signals. By default it routes the AI scan start signal onto PFI7. **AO control config.vi** has the ability to choose a clock source and specification. By default it chooses PFI pin as a

[23] For a description of **V-dependent Conductances.vi** see section 9.1 of the G-clamp User Manual.
[24] These VIs can be found in the library **RT Control.llb** that should be located in your …\LabVIEW 6.1\examples\real-time directory.

clock source, and 7 as the clock source specification. The result is that the analog input scan clock is used to clock the analog output updates when the 'opcode' input of **AO Single Update.vi** is set to 'Output only'. This assures that each time a digital-to-analog conversion is clocked in, the analog output is clocked out. Note that **AI control config.vi** includes **AI start.vi**. and therefore the call to **AI control config.vi** should be the last operation performed in **…Sub.vi** before **G-clamp DQA.vi** is called to prevent overflow of the onboard FIFO[25].]

After the analog output operation the *Code Interface Node* makes an assembly call to read the Time Stamp Counter register off the Pentium-class processor and to obtain a time stamp with a resolution at the frequency of the PXI controller's CPU (see section 10.2). The time stamp is stored in a pre-allocated array for analysis after the *While Loop* has finished executing. The execution order **AO Single Update.vi** - *Code Interface Node* is achieved by placing the *Code Interface Node* into a *Sequence Structure* and by wiring an output of **AO Single Update.vi** to it, thus forcing the *Sequence Structure* to wait until the output of **AO Single Update.vi** is available.

After all shift registers have been updated, the *While loop* starts all over with **AI SingleScan.vi** waiting for the next trigger from the scan clock. What happens during the time until that trigger arrives depends on the setting for 'UseSleepingTimedNonBuffered' in the file **ni-rt.ini** on the PXI controller (see also section 11.1):

- If UseSleepingTimedNonBuffered=FALSE as is recommended in the G-clamp installation instructions given in the G-clamp User Manual to achieve maximum loop rates, the feedback loop will block all other processes running in parallel (e.g. the communication loop) from proceeding. As the communication loop has to wait for the end of a data acquisition (iteration) anyway before it can communicate something to the host computer, this is not a loss.
- If UseSleepingTimedNonBuffered=TRUE, **AI SingleScan.vi** acts like a wait-command until the next analog-to-digital conversion is triggered by the scan clock. Until then the thread in which the feedback loop runs is effectively put to

[25] Alternatively **AI control config.vi** can be broken apart into its constituent sub-VIs so that everything except **AI Start.vi** is performed once outside the *While loop* in **…Sub.vi** and **AI Start.vi** remains as the last operation before the *While Loop* in **G-clamp DQA.vi** (see also section 7.3.1 V-clamp Sub.vi for an example).

sleep and the PXI controller's CPU is free to run other threads, e.g. the communication loop.

Once the While Loop has finished, the analog input and output operations are cleared with **AI Clear.vi** and **AO Clear.vi**. Most importantly, this stops the data acquisition board from doing further analog-to-digital conversions and causing a FIFO overflow, which would rest the whole DAQ board. Thus the tasks IDs handed down from **…Sub.vi** can be re-used for the next data acquisition (iteration) without going through the whole configuration process again.

Finally, the time stamps are analyzed to obtain the RT Loop Info. Before the 1-D array of time stamps is handed to **Timing Analysis.vi**, the first 200 elements are chopped off with a *Delete From Array*. This serves to eliminate intervals longer than the acquisition rate bound to happen at the beginning of the data acquisition: It can take several cycles of the feedback loop before all the hardware processes associated with analog input and output are correctly initialized and working at a regular rate[26].

[26] For this reason LabVIEW-RT example-VIs usually set the 'opcode' input of **AI SingleScan.vi** to 'read newest data' for the first 10 cycles of the control loop. As these examples usually run at much lower speeds and G-clamp is supposed to go to maximum speeds, we thought it saver to discard more, but potentially extremely short cycles to give the system the time it needs before it runs regularly.

6 Priorities and execution systems

While the experiment module VI and thus the communication loop operate under 'normal' priority, the feedback loop - following general LabVIEW-RT programming guidelines - executes with the highest priority level (time-critical priority). This can be achieved by setting either the feedback loop module **G-clamp DQA.vi** to this priority level or by setting the caller of **G-clamp DQA.vi**, the **…Sub.vi** within the experiment module VI, to this level as sub-VIs automatically execute at the priority level of the calling VI if the priority level of the calling VI is higher than the priority level of the called sub-VI. In the G-clamp distributions v1.1 to v1.1.2 it is the **…Sub.vi** within the experiment module VIs that have been set to 'time-critical' to ensure that not only the feedback loop itself but also the timing between consecutive data acquisitions (iterations) is under the strictest timing control.

While this makes sense as far as the five priority levels from 'backgound' to 'time-critical' are concerned, it is unclear from National Instruments Application Note 144 (Using LabVIEW to Create Multithreaded VIs for Maximum Performance and Reliability[27]) how the priority level 'subroutine' fits in under the conditions of a time-critical process running under the real-time operating system of the PXI controller.We have found that setting all sub-VIs used by **G-clamp DQA.vi** (LabVIEW system VIs and custom VIs) to 'subroutine' allows higher feedback loop rates than setting them to another level (which would be overridden by the 'time-critical' setting of the calling VI).

As far as the possible execution systems are concerned, in my opinion Application Note 144 doesn't provide any useful information at all and again one is forced to simply experiment with different settings.

[27] Application Note 144 is available from NIs website or installed as **\LabVIEW\manuals\ mltithrd.pdf**

7 Other experiment modules

7.1 Gsyn Threshold

Gsyn Threshold.vi is essentially a clone of **IV Relation.vi**. The only difference is that the number of data points per data acquisition (iteration) – which is required to create the FIFO 'Result Data Queue' - is not derived from the variant 'DAQ Control Values' but from the variant 'Template'. 'Template' is converted to a string that gives the name of the template file to be used and the file is opened and read with **read gsyn.vi**. Required parameters as well as the template itself are transferred to **Gsyn Threshold Sub.vi** via the RT-FIFOs 'Control Values' and 'Result Data Queue'.

7.1.1 read gsyn.vi

read gsyn.vi first opens the template file for reading-only and then determines the length of the file (in bytes) by calling *EOF* which returns the offset of end-of-file. The byte-length of the file is divided by 4 as the template file contains only single precision numbers (SGLs), i.e. 4 bytes/number. The first *Read File* returns the header of the template by reading 19 SGLs from the beginning of the file. With the 'pos mode' and the 'pos offset' inputs unwired, the second *Read File* starts reading the template proper from where the first *Read File* left the file mark when it finished. Note that the only information actually used from the header is its first element, i.e. the sample interval.

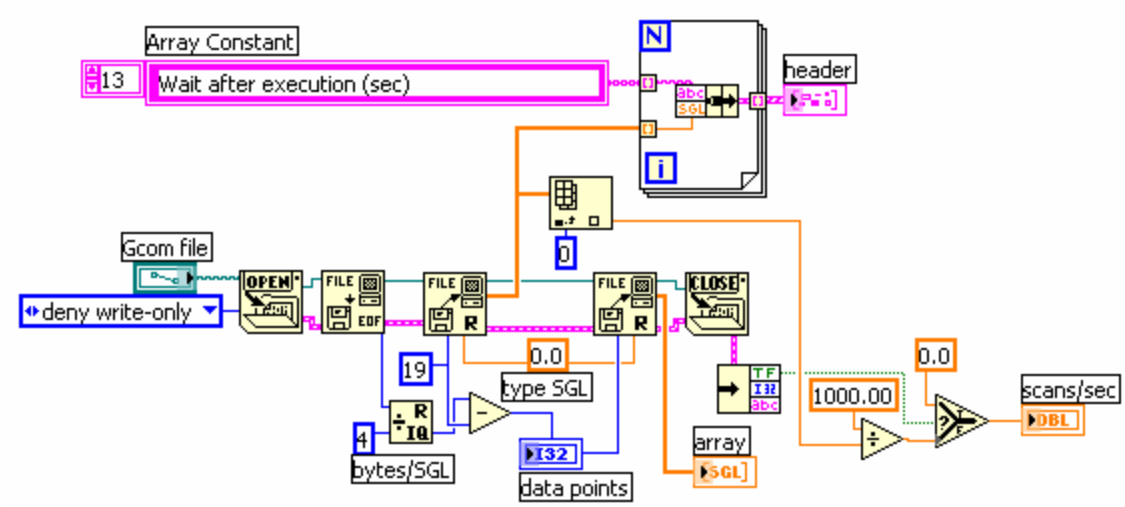

7.1.2 Gsyn Threshold Sub.vi

Gsyn Threshold Sub.vi receives the template via the RT-FIFO 'Result Data Queue' before the *While Loop* starts executing. Scaling of the template is done within the *While Loop* by multiplying the template with the mean of two shift registers initialized with the user-specified values of the controls 'Gmin' and 'Gmax'.

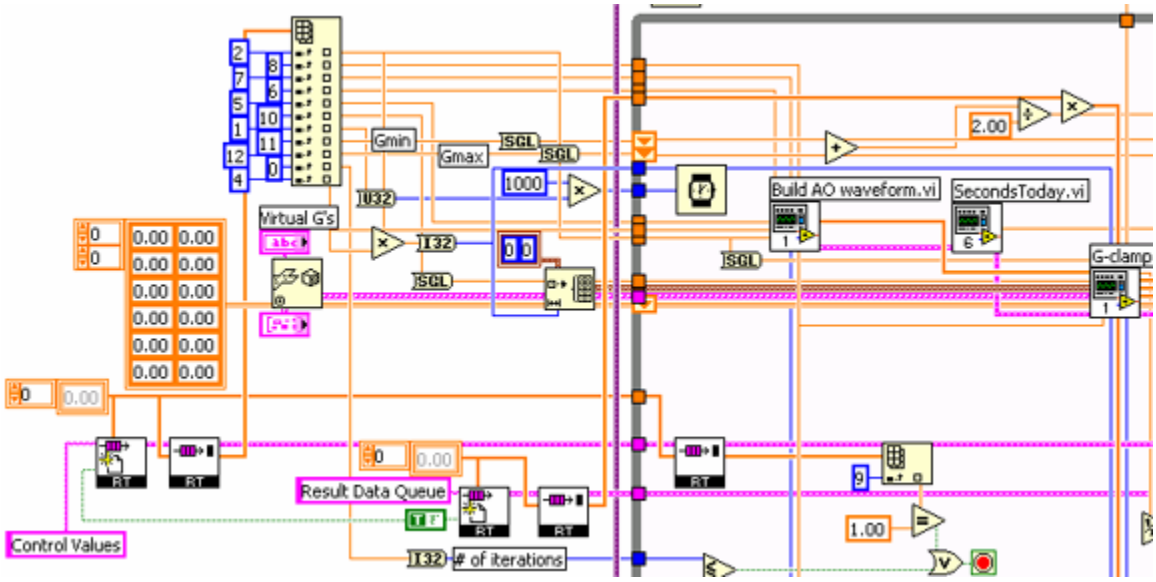

After a data acquisition (iteration) has been performed, the voltage trace is analyzed to determine whether the virtual synapse elicited an action potential: *Array Max & Min* is applied to the 1-D array and the maximum value is checked against 0. Thus the analysis is a simple threshold comparison with the threshold value

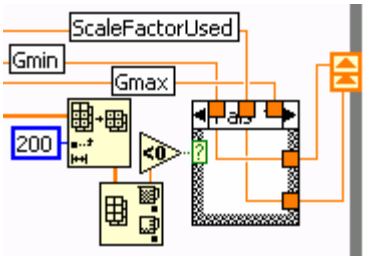

hard-wired into the program as a constant. Note that an *Array Subset* is used to eliminate the first 200 data points of the trace from the analysis. This eliminates any 0-crossings that can occur as a consequence of initially arbitrary state variables when virtual voltage-dependent conductances are used, especially when used together with a passive RC circuit which has no sub-zero potential initially. Depending on the outcome of the comparison, the content of either the 'Gmin' shift register or of the 'Gmax' shift register is replaced with the scaling factor used for the previous data acquisition (iteration).

Note also that the *While Loop* contains **Build AO waveform.vi**, which is used in **IV Relation Sub.vi** to generate the DC current command. This allows execution of a template file in combination with a constant current injection.

7.2 Synaptic Gain

The architecture of **Synaptic Gain.vi** differs from the other experiment module VIs. **Synaptic Gain.vi** executes a potentially very long template file a single time. Thus no loop structure is required to repetitively transmit acquired data to the host and no RT FIFO is used to transfer the acquired traces (voltage and current trace) from **Synaptic Gain Sub.vi** to **Synaptic Gain.vi**. In addition, because transfer of very long traces to the host computer can take a long time, it is optional. This necessitates a function to save acquired traces on the hard disk of the PXI controller if the user wants to save the acquired traces without having them transferred to the host computer.

Synaptic Gain.vi first builds paths to the template files and provides **LoadTemplates.vi** with an array of SGLs containing the factors for scaling the templates.

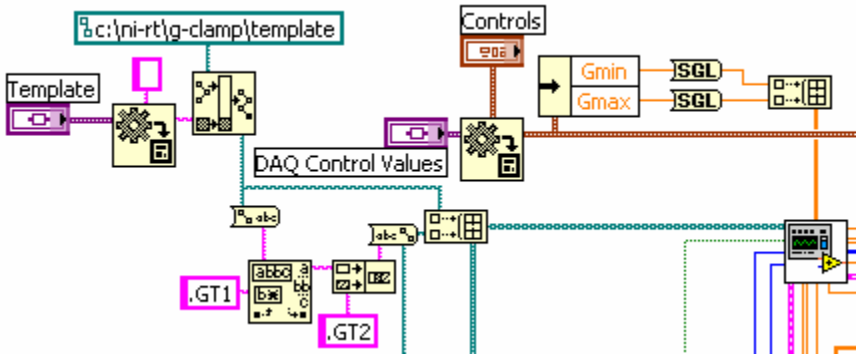

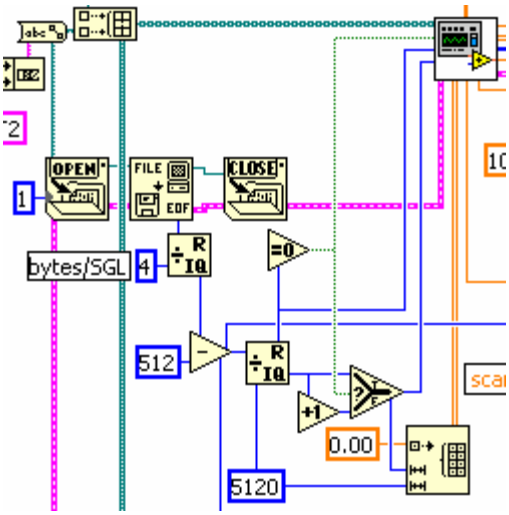

Next the template length (number of data points) is determined and memory for the template is allocated by initializing a 2-D array of SGLs. An *EOF* is used to determine the file length (bytes divided by 4). Subtracting the length of the header (128 SGLs = 512 bytes) gives the template length as number of data points. The template length is next divided by 5120 using *Quotient & Remainder* because the template is going to be read from file and stored in the 2-D array in chunks of 5120 data points[28]. If the remainder = 0, row size of the 2-D array is set to the integer quotient, otherwise to integer quotient + 1. This number is also fed into **LoadTemplates.vi** together with the remainder giving the number of elements in the last data chunk and the header length (in bytes) of the template file.

7.2.1 LoadTemplates.vi

The outer large *For Loop* in **LoadTemplates.vi** executes once for each template file to read. Its number of iterations is obtained by auto-indexing the 1-D arrays 'ScalingFactors' and 'TemplateFilePaths'. It first opens a file for reading-only and reads the first 19 SGLs, i.e. the header, into a 1-D array. From the header array it extracts

- the mean presynaptic activity fpre [Hz] (index 10)
- the length of the template [ms] (index 11)
- the time to wait after execution [sec] before starting another experiment (index 13)
- the sample interval [ms] (index 0)
- and the # of secondary synapses (index 9)

Because the first and the last of these parameters have different meanings depending on the template file type, the type is determined by reversing the file name and comparing

[28] For some unknown reason it was impossible to read very long template files and write very long data files in a single file read or file write operation. This problem could be overcome by repetitive reading/writing, i.e. breaking the data into chunks. 5120 is an integer multiple of 128. 128 data points (SGLs) are 512 bytes, which is the hard disk sector size in LabVIEW RT on a PXI controller. Thus 5120 was chosen to optimize file transfer rates (see section 11.2 File I/O in LabVIEW RT).

the first string element with '2' (for *.gt2). For a pair of a gt1- and gt2-file, the fpre values correctly reflect the mean frequency of events in the gt1-file and of events in the gt2-file and are summed up in the *For Loop*. The number of secondaries can be ignored in the *For Loop* iteration reading the gt1-file as the gt1-file reflects activity of one synapse and 1 is added to the shift

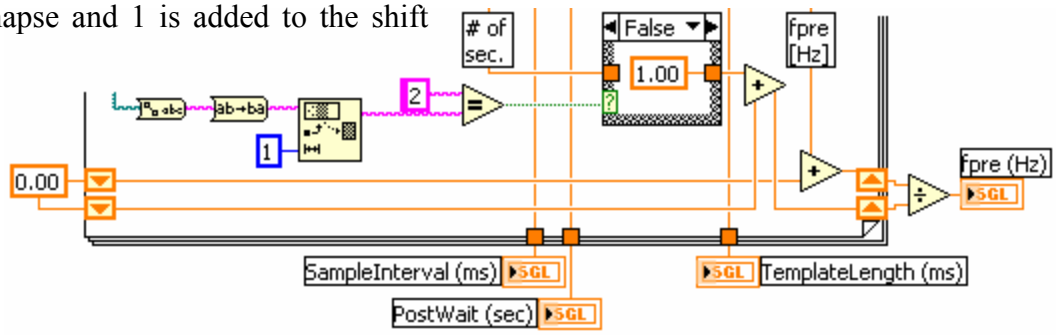

register. During the second iteration of the *For Loop*, the number of secondaries in the gt2-file is read out and added to the shift register. Thus 'fpre (Hz)' is obtained by dividing the sum of presynaptic mean frequencies by the sum of synapses.

Note that the outputs 'SampleInterval (ms)', 'PostWait (sec)' and 'TemplateLength (ms)' reflect only the corresponding values found in the header of the last template file read from a series of template files.

The smaller *For Loop* within the large *For Loop* reads the template file in chunks of 5120 values (except the last chunk which can be anything in between 1 and 5120). The *For Loop* uses a shift register to set the read start position ('pos offset' input of *Read File*) to the 'offset' output of the previous file read operation. For the first iteration of the *For Loop* the shift register

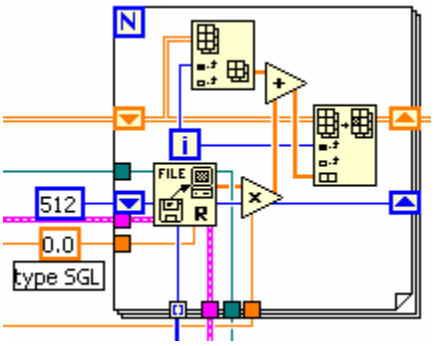

is initialized with a constant of value 512. The chunk read is next multiplied with the scale factor for the template file and summed up with the row in the 2-D buffer array that it is going to replace. This buffer is maintained with a shift register from one iteration of the large outer *For Loop* to the next. Thus by continuously updating this buffer the memory requirement of reading and combining multiple template files is kept to the size of the final template.

7.2.2 Synaptic Gain Sub.vi

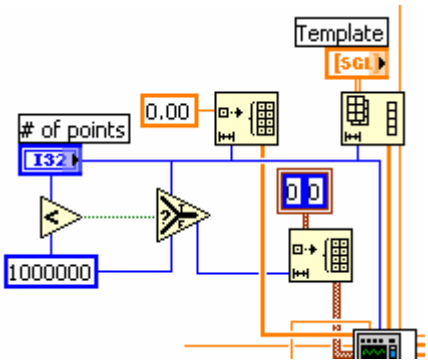

Synaptic Gain Sub.vi converts the 2-D array with the template into a 1-D array before it is handed to **G-clamp DQA.vi**. This makes it easier to retrieve individual array elements in the feedback control loop as the only index required can be obtained without any computation from the iteration (i) terminal of the *While Loop* in **G-clamp DQA.vi**. Changing the dimensionality of an array does not require a new memory allocation as the number of elements stays the same and therefore the same memory space is reused. **Synaptic Gain Sub.vi** also pre-allocates memory for the voltage trace to be acquired by initializing a 1-D array of SGLs and for the time stamps collected in the feedback control loop. Note that this 1-D array of cluster of unsigned long integers (U 32) is as long as the template but does not exceed 1.000.000 elements. As it is unlikely that loop rates change during a data acquisition, collecting more than 1 million time stamps will provide no further information about deterministic execution of the control loop and the restriction to 1 million prevents excessive memory consumption by the time stamps. Thus although the feedback loop will still collect a time stamp during each iteration, each value in excess of 1 million will be discarded.

Once **G-clamp DQA.vi** has finished, the acquired voltage trace is analyzed to determine the number of action potentials elicited by the executed template. This is done with **Peak Detector PtByPt.vi**. While the point-by-point analysis VIs are designed to be used in a control loop by processing continuous data streams one point at a time, they require some overhead ultimately slowing down a control loop that is supposed to run as fast as possible. Note that the accuracy of **Peak Detector PtByPt.vi** depends on the 'width' input, which is set to a constant. Thus if 'width' is too narrow for the width of an action potential at a given sampling rate, **Peak Detector PtByPt.vi** can miss peaks.

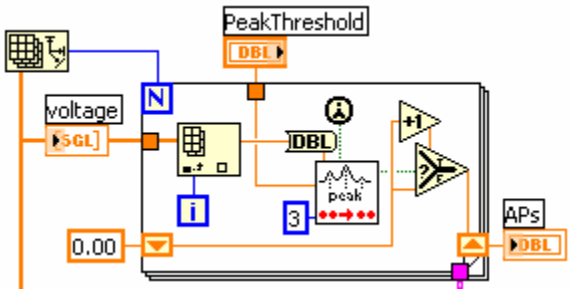

After **Synaptic Gain Sub.vi** has finished, the results are communicated to **G-clamp.vi** via the TCP connection:

1. Mean presynaptic frequency ('fpre (Hz) output from **LoadTemplates.vi**), synaptic gain ('APs' output of **Synaptic Gain Sub.vi** divided by total number of presynaptic events), ending time of the experiment as seconds since 12:00 AM and actual sample rate (elements 0 and 1 of 'Output Array' from **Synaptic Gain Sub.vi**) are assembled in that order into a 1-D array of 4 elements, converted to a string, the length of this string (also converted to a string) concatenated in front of the string and sent via a *TCP Write* to **G-clamp.vi**.

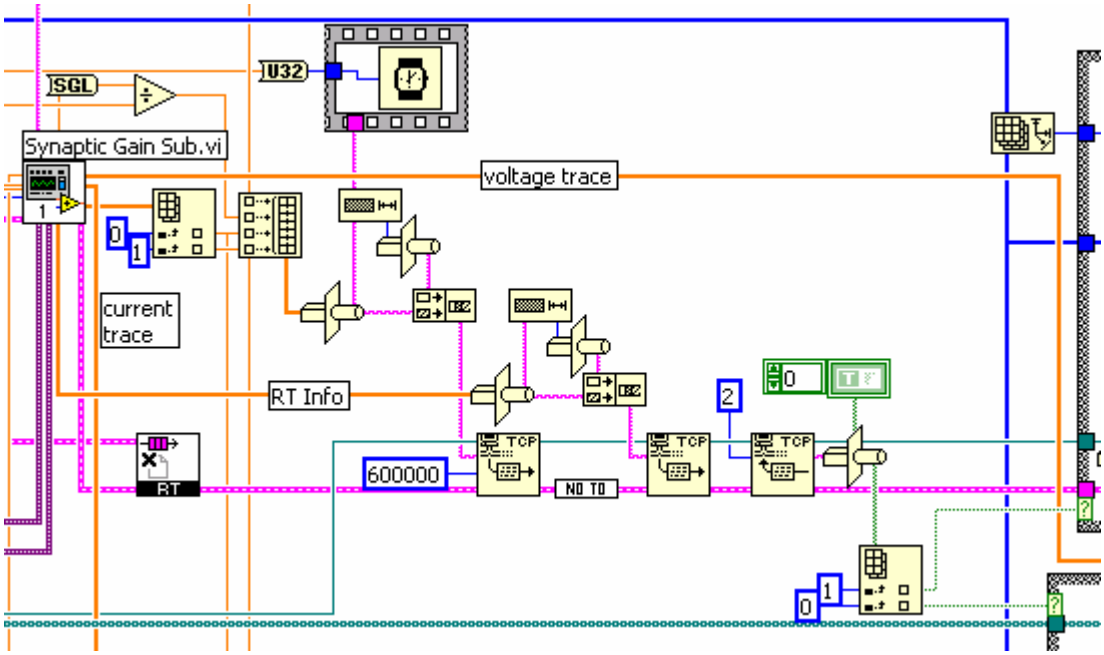

2. In the same way, the 'RT Info' output of **Synaptic Gain Sub.vi**, which is also an array of 4 elements, is converted to a string and communicated to **G-clamp.vi**.

With these two *TCP Write* operations of **Synaptic Gain.vi**, **G-clamp.vi** completes execution of the 'New Data?!' case of its *Case Structure* and proceeds to the 'Process' case (see section 4.1.11).

3. **Synaptic Gain.vi** next waits for 25 seconds for a TCP communication from **V-clamp.vi** (the unwired 'timeout ms' input of *TCP Read* defaults to 25000). The corresponding *TCP Write* of **G-clamp.vi** occurs in frame 0 of the *Sequence Structure* in the case processing Synaptic Gain data and indicates whether the user

wants the traces transferred to the host computer for display and whether he wants the traces saved by writing them to disk on the PXI controller (see section 4.1.13). This communication is expected to be 2 bytes long and after arrival is converted to a 1-D array of Booleans. The array is indexed and interpreted with *Equal To 0?*.

4. If the second array element is TRUE, **Synaptic Gain.vi** saves the traces into a file. It first executes **Write to Disk mod.vi**, which creates the data file and writes the header:

7.2.3 Write to Disk mod.vi

Write to Disk mod.vi checks with *File/Directory Info* whether a data directory already exists and if not, it creates it with *New Directory*. It formats the recording time from a number (seconds since 12:00 AM) into an intelligible string and combines it with a string giving the day of the month to produce the data file name.

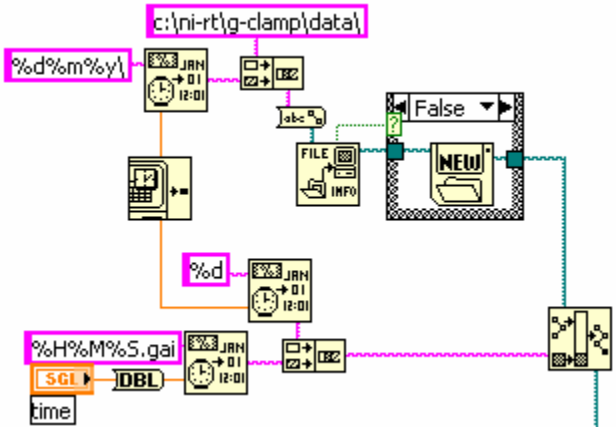

It concatenates the name(s) of the template file(s) used into a string and checks whether the string length is an integer multiple of 4. If not, it adds Spaces to fulfill this condition, which obliterates any bit-shifts when reading out the header of the file by reading everything from the beginning as an array of SGLs.

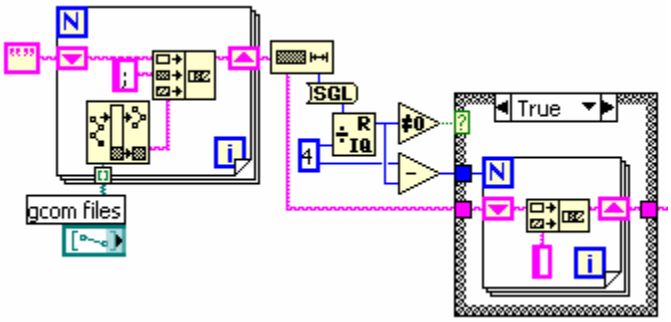

It creates the data file with *New File*, writes a SGL giving the length of the string with the template file names, the string itself and the a 1-D array of SGLs

supplied by Synaptic Gain.vi which contains other header information. It uses the 'offset' output of the last Write File to get the current length of the file and if necessary it adds bytes (I 8) to extend the file to a length of 512 bytes. Having a header of 512 bytes means that subsequent writing of the trace data starts with a new disk sector and therefore in the most efficient way (see section 11.2 File I/O in LabVIEW RT).

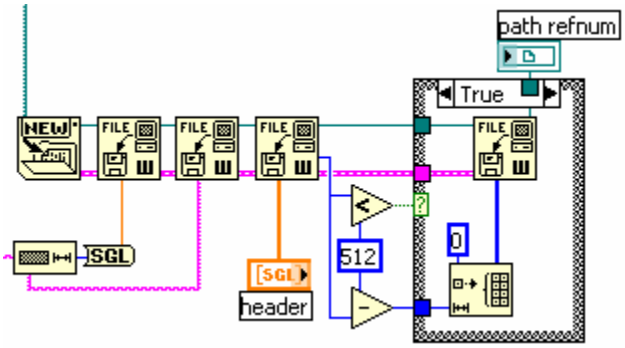

Synaptic Gain.vi next writes the traces to file, first the voltage trace and then the current trace, by breaking each trace into smaller chunks of 5120 data points (or less for the last chunk).

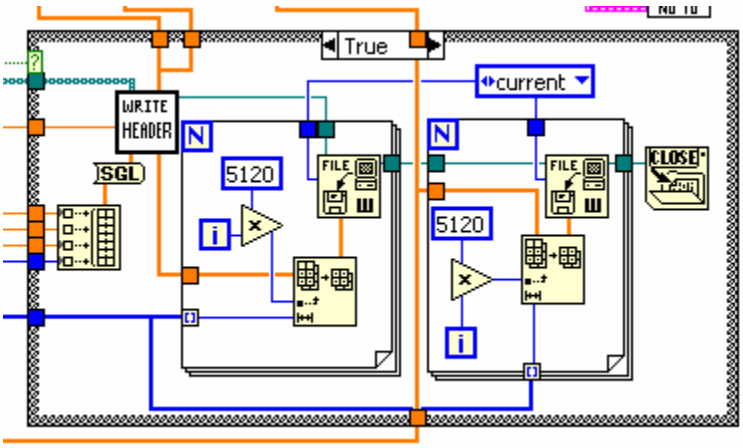

5. Only after the *Case Structure* for saving the data has completed does the other *Case Structure* for transmitting the data to G-clamp.vi start executing[29]. It transmits each trace (starting with the voltage trace) by first transmitting a number (a long integer (I 32) converted to a string, therefore 4 bytes) indicating how many chunks of 5120 data points it will send before repetitively using *TCP Write* to transmit one 5120 data points chunk at a time.

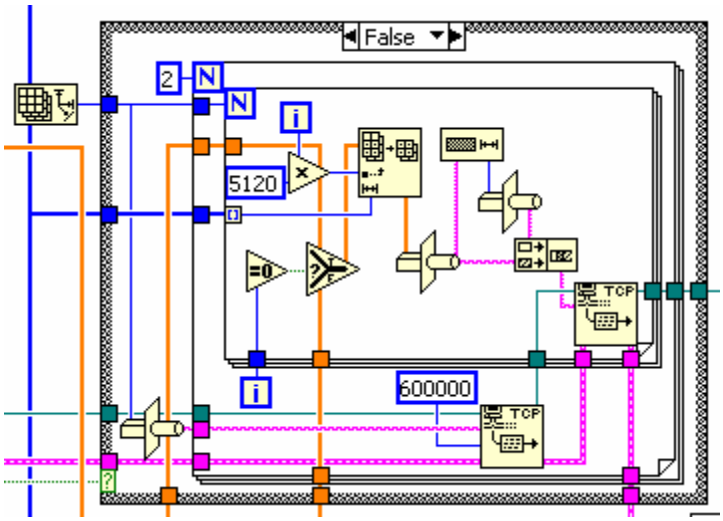

7.3 V-clamp

V-clamp.vi is essentially a clone of **IV Relation.vi**. The only difference is that the number of data acquisitions (iterations) to be performed is not derived from the variant 'DAQ Control Values' but from the variant 'Script'. 'Script' is first converted to a flattened string and with an *Unflatten From String* the script as seen on the front panel of **G-clamp.vi** is obtained.

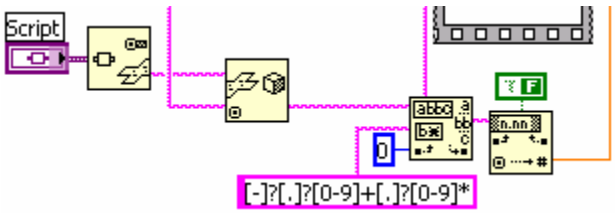

[29] The reason for the sequential File I/O and TCP/IP is that we thought parallel execution might require duplication of the trace arrays. Theoretically this should not be the case, as neither operation changes the data and therefore LabVIEW should be able to use one copy of the data for both operations. We suspect that something else might reduce memory requirement and especially speed up these operations: According to a web presentation 'Handling large data sets in LabVIEW' given by an NI engineer, Damien Gray, and the accompanying handout 'Large data objects in LabVIEW' (both downloadable from NIs website as pdfs), tunnels used to route data sets through loops create a data copy each time the loop iterates. *For Loops* are used to break the File I/O and TCP/IP operations into smaller tasks done repeatedly. While we think that the same memory space is used over and over again as long as the size of the data set stays constant, it is possible that each creation of a copy – or memory allocation in other words – invokes the memory manager and thus slows down the whole process. This would explain the comparatively slow saving of data we observe in **Synaptic Gain.vi**, which is much slower than what we expected after making sure that writing is done in multiples of 512 bytes and which is much slower than the reading of the template file(s) at the beginning of the experiment. Damien Gray's advice is to use shift registers, which will make a memory copy only the first time the loop executes.

A *Match Pattern* searches for the first occurrence of a string expression matching a number in the script which is supposed to come in the first line after a 'For'-command. The unflattened script is also passed on to V-clamp Sub.vi for interpretation by ScriptAnalyzer.vi.

7.3.1 V-clamp Sub.vi

V-clamp Sub.vi does not use the feedback loop module **G-clamp DQA.vi**. Instead a simplified feedback loop is integrated directly into the *While Loop* of **V-clamp Sub.vi** that executes once per data acquisition (iteration). The simplification consists of stripping the feedback loop of any elements involved in the calculation of current through virtual conductances, as virtual conductances are not used in voltage clamp. In addition, **V-clamp Sub.vi** contains all configuration VIs required to tie the output of the command signal by **AO Single Update.vi** to the scan clock. However, because the 'opcode' input of **AO Single Update.vi** is set to 'output and update', these settings are ignored and output of the command signal occurs as soon as **AO Single Update.vi** executes.

8 Other custom VIs

8.1 AnalogInOutConfig.VI

AnalogInOutConfig.vi contains two cluster controls that specify the settings for the analog-input ('AI Cluster') and analog-out channels ('AO Cluster'). Execution of **AnalogInOutConfig.vi** follows the same logic as outlined for **TargetList.vi** (section 8.5): It waits until the user is finished and then updates the output cluster indicators 'AI Cluster' and 'AO Cluster' from which **G-clamp.vi** derives the updated channel information when **AnalogInOutConfig.vi** is called by the user via the menu 'File > Preferences > DAQ Board Configuration'. As with **TargetList.vi**, **G-clamp.vi**, will invoke the method 'Make Current Values Default' and subsequently 'Save VI'. This will make any changes in the cluster indicators 'AI Cluster' and 'AO Cluster' permanent and allow **G-clamp.vi** during initialization to obtain the information about the last PXI controller by invoking the method 'Get Control Value' on the 'AI Cluster' and 'AO Cluster' indicators of **AnalogInOutConfig.vi** (see 4.1.2 Initialize2).

8.2 List Templates.VI

In Embedded.llb.

List Templates.vi performs 3 functions:

1. It returns a list of available conductance modules. Because the order of modules in this list has to reflect the order in which the conductance module VIs are implemented in **V-dependent Conductances.vi**, assembling the list involves several steps. The process starts with letting **Create Plugin List.vi** search the library **Embedded.llb** for all VIs with type specifier unique for conductance module VIs

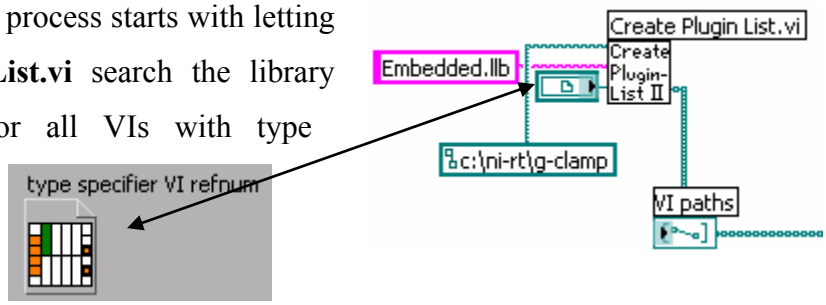

(**Create Plugin List.vi**[30] uses *Open VI reference* and the provided type specifier to open every VI in **Embedded.llb**. *Open VI reference* will return an error with every VI of a different type, i.e. with every VI that has a different connector pane).

Before the list of conductance modules is sorted into the correct order, the settings for each conductance are retrieved from the configuration file **Embedded.cfg**. For each conductance module the content of the string control 'VI Label' is obtained.

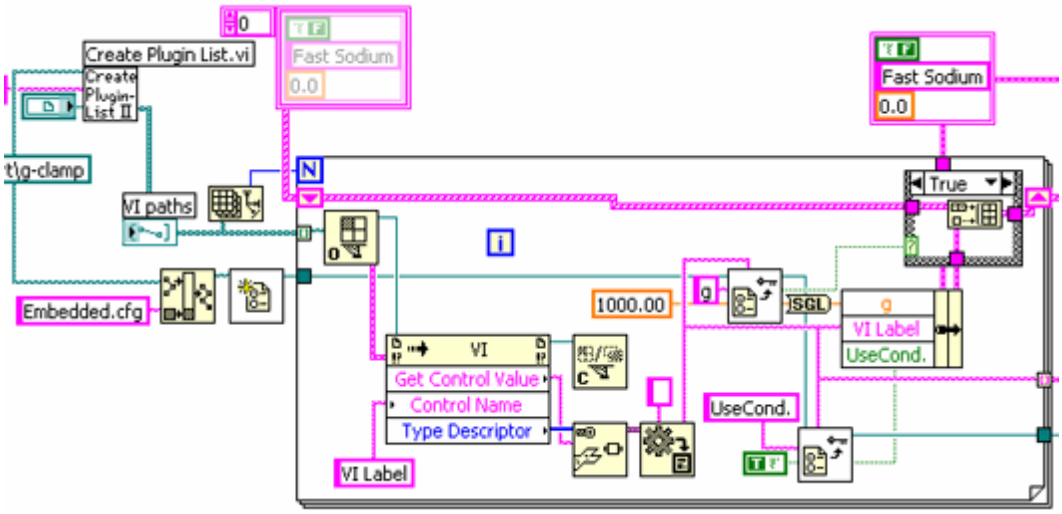

This string identifies a conductance in the front panel control 'Virtual G's' of **G-clamp.vi** to the user and it serves here as the section name for that conductance's entries in **Embedded.cfg**. If an entry for a conductance exists in **Embedded.cfg**, the bundled settings for a conductance are added to a growing 1-D array of clusters. A 1-D array of all the VI labels is passed to the next *For Loop* in which it is compared with a 1-D array obtained from **Get Section Names.vi** and containing all section names in **Embedded.cfg**. A new 1-D array is built containing only those section names corresponding to conductance modules and in the same

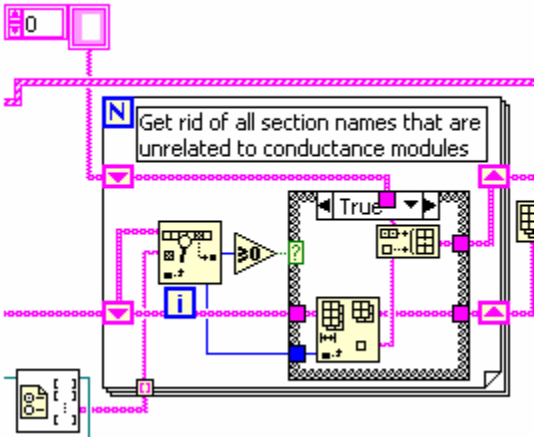

[30] **Create Plugin List.vi** is a slightly modified version of an example VI downloaded from a National Instruments website illustrating how to program a plug-in architecture in LabVIEW.

order as in **Embedded.cfg**, i.e. in the same order as the conductance modules are supposed to be used in **V-dependent Conductances.vi**. This still leaves open the possibility that a new conductance module has been found by **Create Plugin List.vi** for which no entry in **Embedded.cfg** yet exists. In this case the depleted 1-D array of VI labels is not empty, i.e. has a length of >0 and the TRUE case of the next *Case Structure* executes.

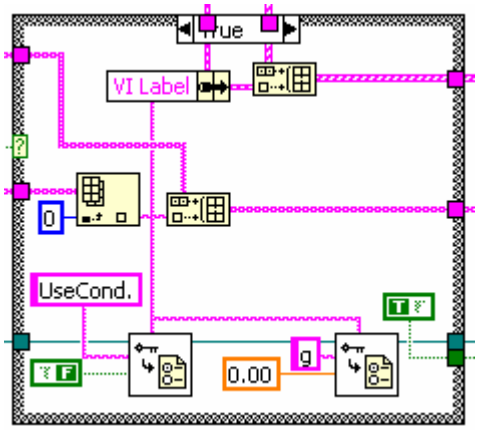

Another cluster is added to the 1-D array of clusters containing the conductance settings found in **Embedded.cfg** with the cluster element 'VI Label' set to the first element remaining in the 1-D array that triggered execution of the TRUE case. Likewise, the 1-D array of section names created in the previous *For Loop* is expanded by one element. Lastly, an entry for the new conductance module is made in **Embedded.cfg**.

Note that this expansion of the 1-D array of clusters takes care of only one new conductance module. If more than one new conductance module was created, only the first one found by **Create Plugin List.vi** will show up on the front panel of **G-clamp.vi** irrespective of whether that one was actually the first new one implemented in **V-dependent Conductances.vi**.

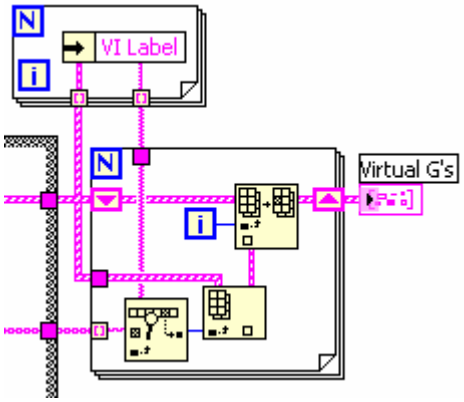

Finally, the 1-D array of clusters is re-organized based on the order of elements in the 1-D array of section names.

2. It returns a list of available template files by searching the directory c:\ni-rt\g-clamp\template on the PXI controller for files of type *.gty and *.gt1. It does <u>not</u> check whether a corresponding *.gt2 file exists for each *.gt1 file found. The list

is available in the string indicator 'Available templates' with file names separated by a *Tab Constant*.

3. It resets both analog output channels by outputting a 0 voltage. This is in case that the output registers for both channels took on some arbitrary values as can happen after starting the PXI controller. It also performs a short data acquisition on analog input channels 0 and 1 which apparently[31] is required to initialize the analog input hardware after the PXI controller has been started.

   This function has a serious flaw[32]: The control 'device (1)' which provides **AI Config.vi** and **AO Config.vi** with the device number of the installed DAQ board is not updated at all. Thus correct functioning of the reset process depends on having set the default value of the control 'device (1)' to the correct number for a given PXI controller.

8.3 SaveConfig.VI

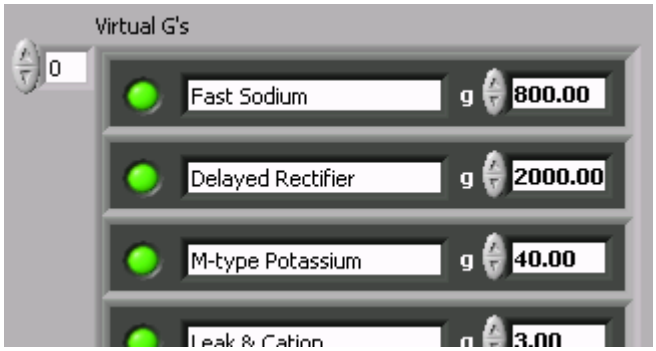

This VI is part of Embedded.llb. It writes the settings for the virtual conductances to the configuration file **Embedded.cfg** on the PXI controller. Note that **Write Key.vi** does not actually write to file but only predisposes a key for writing. To achieve the actual write operation, the 'write configuration file?' input of **Close Config Data.vi** has to be set to TRUE.

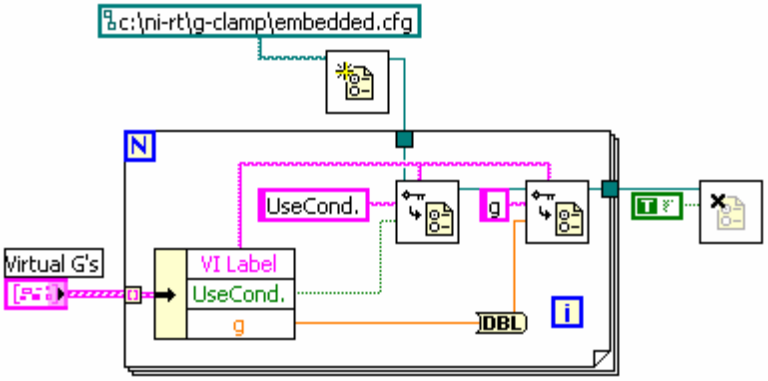

[31] We observed that without this analog input operation during G-clamp initialization the first real data acquisition performed by G-clamp as an experiment will result in bogus values.
[32] For next revision: This can be fixed with an *Invoke Method: Set Control Value* in the 'Initialize' case of **G-clamp.vi** right before 'Run VI' is invoked.

8.4 ScriptAnalyzer.VI

This VI is part of Embedded.llb. It analyzes the voltage command script in the V-clamp module and builds the command signal, which is then output to the recording amplifier. Interpretation of the script requires identification of the commands and the numerical values that follow almost all commands. As the whole script is a single string, the string-functions *Match Pattern* and *Fract/Exp String To Number* are used in a repetitive manner: *Match Pattern* finds the first number in the string by searching for a regular expression defining a number (see 'Description of reg. expression' in Figure 8.1). The string is then split into

- a substring with all characters before the number (command + a Space),
- a substring with all characters making up the number and
- a substring with everything after the number (remainder of the script).

The string making up the number is then converted to a numerical value with *Fract/Exp String To Number*.

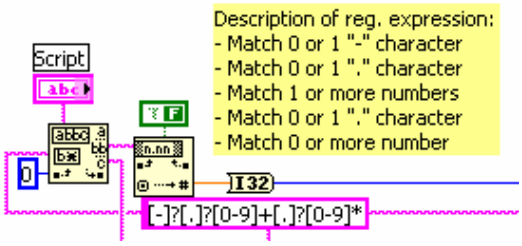

Figure 8.1

The first time this mechanism is employed, **ScriptAnalyzer.VI** expects the for-command. Thus obtaining the substring with all characters before the number is actually unnecessary and the corresponding output of *Match Pattern* as shown in **Error! Reference source not found.** is unwired. In this instance, **ScriptAnalyzer.VI** only uses the numerical value to set the count (N) terminal of the large *For Loop* to the intended number of iterations.

The remainder of the script-string is then analyzed by repeating this basic mechanism again and again. In most cases, i.e. whenever the script continues in a new line, the first

character in the remaining script-string is a Line Feed (LF) or[33] Carriage Return (CR). To get rid of this character, the *String Subset* function is employed (Figure 8.2):

Figure 8.2

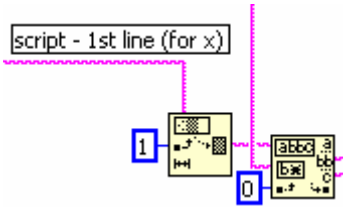

After having determined the number of iterations, **ScriptAnalyzer.VI** proceeds with determining the total length of the intended command sequence. This is done in a *While Loop* by summing up all numbers following a wait-command. After the number of iterations and the total command length has been determined, a 2-dimensional array for the command-signal is initialized with zeroes. Obtaining the first wait-value of the script initializes a pointer indexing the position from which to start replacing the zeroes with a new voltage value.

After the first two lines of the script have been interpreted, the remainder of the script enters the large *For Loop* (# of iterations) and the enclosed *While loop*. The *While loop* operates on the presumption that the remaining script consists of a repetition of the sequence:

- voltage-change-command
- increment/decrement-command (optional) and
- wait-command.

Thus the 1st *Match Pattern* determines the voltage command type (const=step change or ramp). If the 2nd *Match Pattern* finds an increment or decrement command next, the numerical value of the 1st *Fract/Exp String To Number* is incremented/decremented by the numerical value of the 2nd *Fract/Exp String To Number* multiplied with the iteration (i) terminal of the large *For Loop*. The next command is supposed to be a wait-command, thus the 3rd *Match Pattern* is used only to interpret the next numerical value, which specifies the duration of the new command voltage.

Having obtained all necessary information for this section of the script, a *Replace Array Subset* updates the zero-values of the corresponding part of the 2-D command array to the intended voltage values.

[33] We simply haven't bothered to figure out the exact cause.

The large *For Loop* stops once the 1st *Match Pattern* finds an end-command or if the offset-past-match output returns –1, indicating that no regular expressions satisfying the criteria for a match have been found.

8.5 TargetList.VI

TargetList.vi contains a 1-D array of cluster with each cluster containing necessary data about one available PXI controller. Execution of **TargetList.vi** consists of waiting for user input to either

- extend the array by one element with information about a new PXI controller

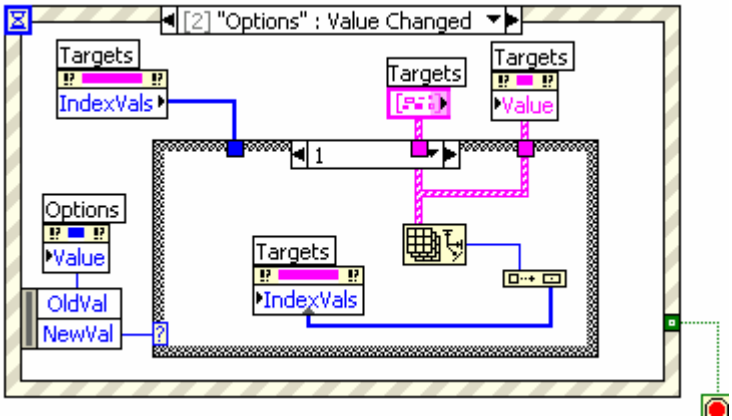

- remove a PXI controller by deleting the corresponding element from the array

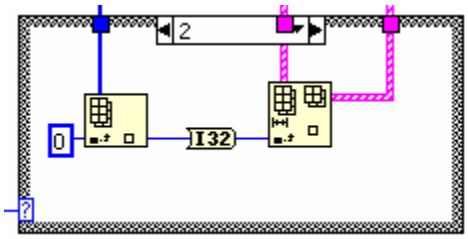

- finish execution and writing information about the selected PXI controller to the indicator 'PXI Target'.

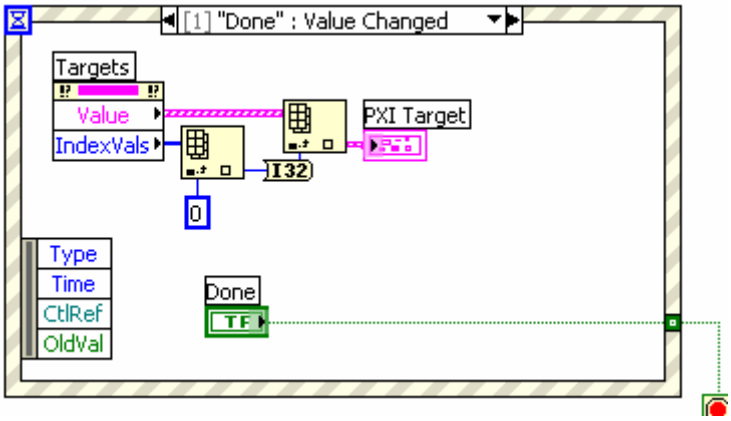

The caller of **TargetList.vi**, **G-clamp.vi**, will invoke the method 'Make Current Values Default' and subsequently 'Save VI'. This will make any additions to or deletions from the list of PXI controllers contained in the 1-D array of cluster permanent as well as any changes in a cluster element. This also allows **G-clamp.vi** during initialization to obtain the information about the last PXI controller by invoking the method 'Get Control Value' on the 'PXI Target' indicator of **TargetList.vi** (see 4.1.1 Initialize).

Note that the time-out input of the *Event Structure* is unwired, i.e. the *Event Structure* never times out. It will wait until a user event occurs, thus keeping G-clamp idle and the computer CPU free to do other things.

9 Adding a new experiment module

For purpose of illustration the new experiment module will be named **NewModule.vi** throughout this section. The discription will first focus on a new experiment module that does not require new parameters and therefore new front panel controls on the user interface (sections 9.1 and 9.2). Implementation of new parameters requiring additional front panel controls on **G-clamp.vi** will be discussed in section 9.3.

9.1 Creating the module

The easiest way to create a new experiment module is to duplicate an existing module and modify it. Because path information to sub-VIs is stored with the calling VI and the LabVIEW RT run time engine on the PXI controller is not able to find a sub-VI in the library **Embedded.llb** if the path does not explicitly point into the library, We strongly recommend the following procedure:

- Copy **Embedded.llb** from the PXI controller to a directory c:\ni-rt\g-clamp on your host computer, i.e. paths to **Embedded.llb** are identical on the host computer and on the PXI controller. You are also going to need a directory c:\ni-rt\g-clamp\gModules on the host computer that contains the conductance module VIs (**gNa.vi**, **gKdr.vi**,…) implemented in **Embedded.llb\V-dependent conductances.vi**.
- Temporarily remove or rename all other copies of **Embedded.llb** on the host computer. If you rename them, rename the extension 'llb' because that is what identifies it to LabVIEW as a LabVIEW library. The reason for making all other **Embedded.llb** copies on the host computer "invisible" to LabVIEW is, to prevent any accidental loading by the new experiment module VI of one of its a sub-VIs from one of these **Embedded.llb** copies that have a directory path different than c:\ni-rt\g-clamp.
- Open the experiment module VI you want to use as a template from c:\ni-rt\g-clamp**Embedded.llb** and save it immediately under a new name (**NewModule.vi**) back into **Embedded.llb** with File > Save As…

- Modify **NewModule.vi** so that it performs your experiment.
- Use File > Save with Options… to save the final version of the experiment module in **Embedded.llb**. Use the Custom Save option and save the entire hierarchy including vi.lib files and external subroutines. With this custom save all LabVIEW system libraries and external subroutines not present on the PXI controller and used by **NewModule.vi** are added to **Embedded.llb**[34].

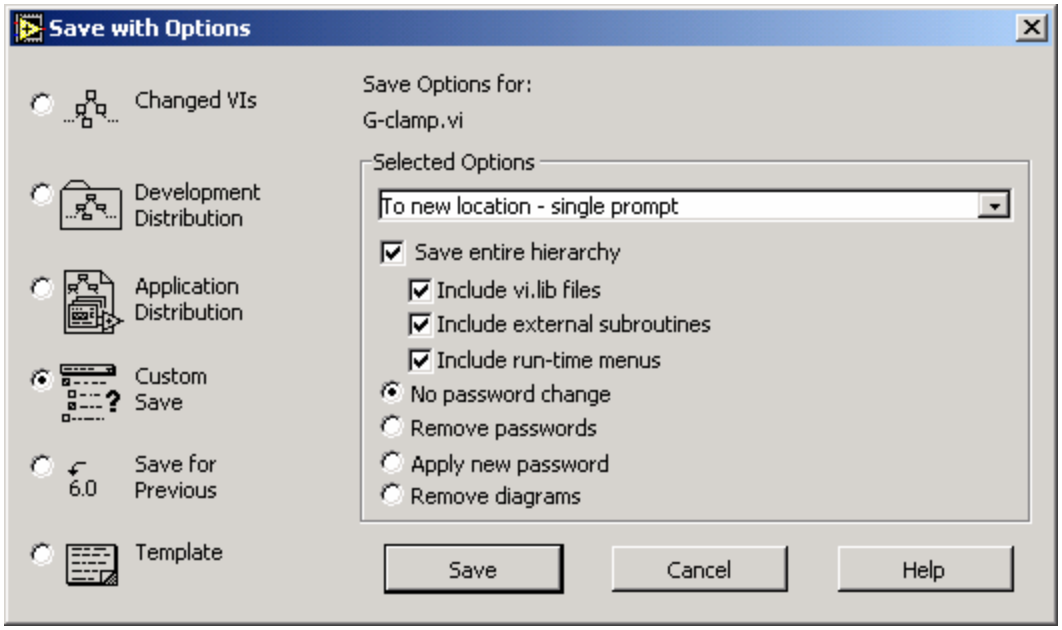

- Copy **Embedded.llb** back into c:\ni-rt\g-clamp on the PXI controller.

9.2 Adding the module to G-clamp.vi

1. From the **G-clamp.vi** menu use Edit > Run-Time Menu… to start the menu editor. Under the menu item 'Function' add the name of the new experiment module (without the extension '.vi') at the end of the list of implemented experiment modules.

[34] If you receive an error message 'The VI is not executable' when finally trying to execute **NewModule.vi** by calling it with **G-clamp.vi**, it might have been that other copies of **Embedded.llb** with different directory paths on the host computer resulted in incorrect path information to **NewModule.vi**'s sub-VIs. In this case use the File > Save with Options… as outlined on all custom sub-VIs of **NewModule.vi**. Start with the custom sub-VI lowest in **NewModule.vi**'s VI hierarchy and work upwards through the hierarchy to the top level VI, i.e. **NewModule.vi**.

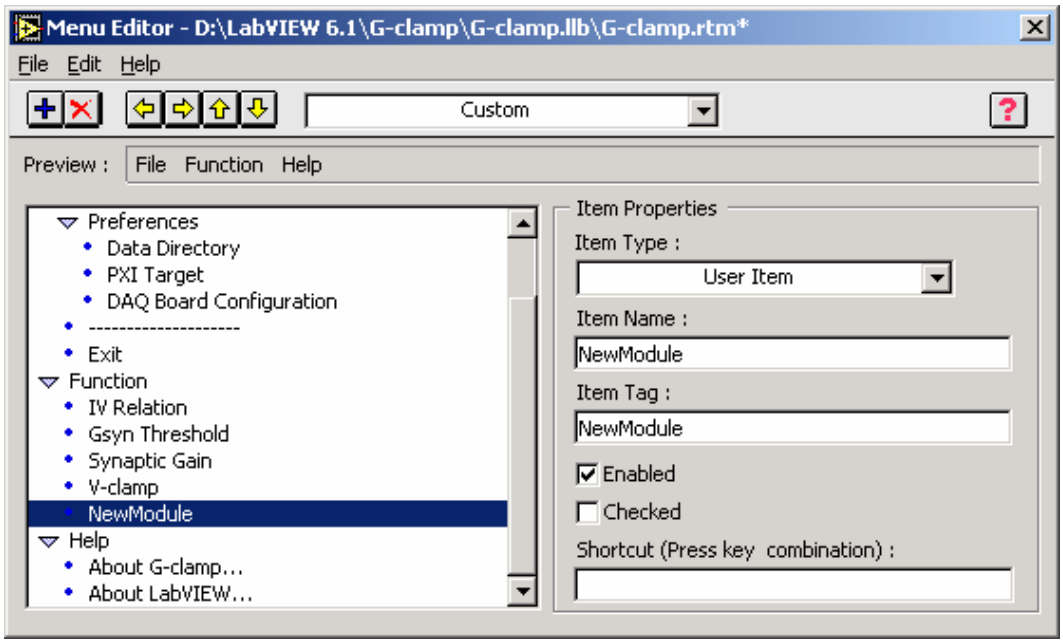

Close the menu editor and save the changes.

2. In the 'Enable/Disable Controls' case add a new element to the 1-D array of clusters constant that holds experiment module-specific display properties for many front panel controls. Scroll to the array element corresponding to the new experiment module (Exp. module 5, therefore array index 4). Its content should be grayed out, indicating that it is not yet set and that the array does not extend that far. Change the constants in the element to the desired values. Even if the values are already correct, change at least one value and set it back in order to activate the element, thus effectively adding it to the array. Note that the cluster element 'Controls Page Enabled State'

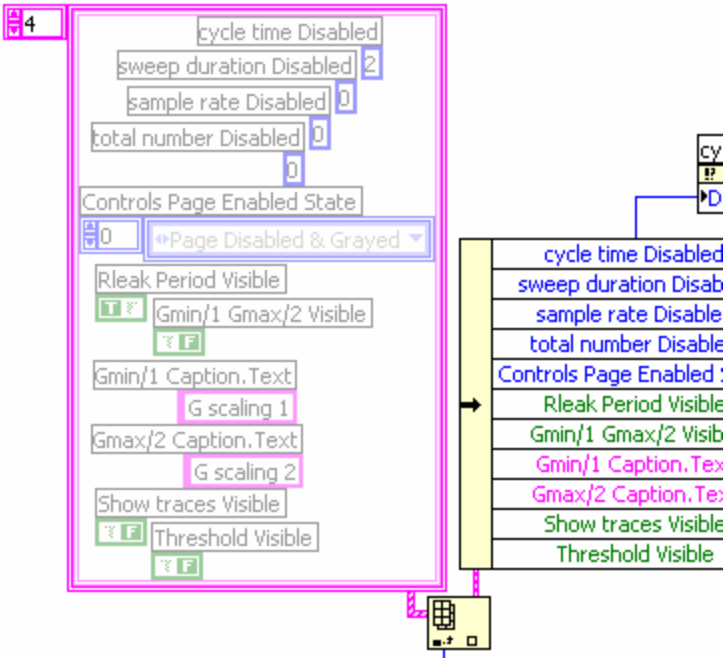

is itself a 1-D array and you have to scroll through that array to see and set the appropriate enabled state for each page of the 'Controls' control.

3. In the 'Enable/Disable Controls' case also add a new element to the 1-D arrays of strings that determine which template files will be available on the 'Template' page of the 'Controls' control.

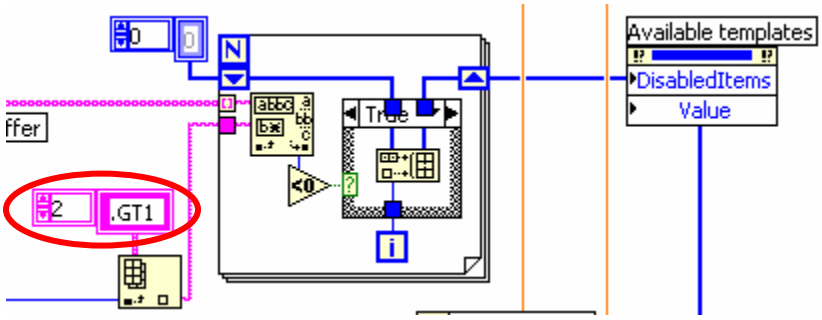

If the new experiment module:

a. does not use templates at all, set the new string element to a Space character.
b. does use templates of type *.gty, set the new string element to '.GTY'.
c. does use templates of type *.gt1/*.gt2, set the new string element to 'GT1'.

4. In the 'Enable/Disable Controls' case also add a new element to the 1-D array of clusters control 'ControlsBuffer'. This control stores the last user control settings when the user switches to another experiment module, so that the settings can be restored when the user switches back to the first experiment module. This is a hidden control normally not visible on the front panel. First make it visible by right-clicking while pointing on the terminal and selecting 'Show Control' in the upcoming menu. On the front panel scroll to the right array index and set the controls to values that you would like to show up when the experiment module is switched to for the first time after starting **G-clamp.vi**. To make these settings permanent, right-click while pointing on the control[35], select Data Operations > Make Current Value Default and save **G-clamp.vi**.

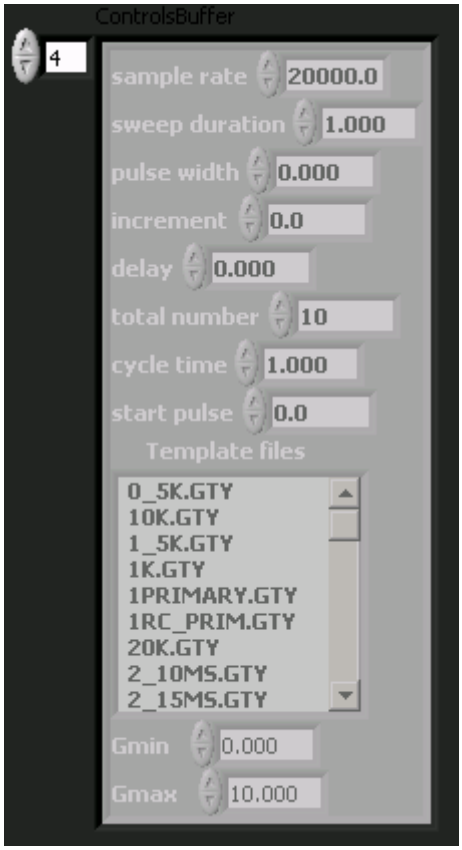

5. In the 'Start ExpModule Step1' case: If the new experiment module uses template files, include the new module into the check whether a template has been selected before **Insert Queue Element.vi** receives the string 'Start ExpModule Step2'. If necessary also add a case to the Case Structure that replaces individual elements of the 15 element 1-D array of SGLs 'DAQ Control Values' of the cluster 'Cluster' with control values other than derived from the cluster control 'Settings'.

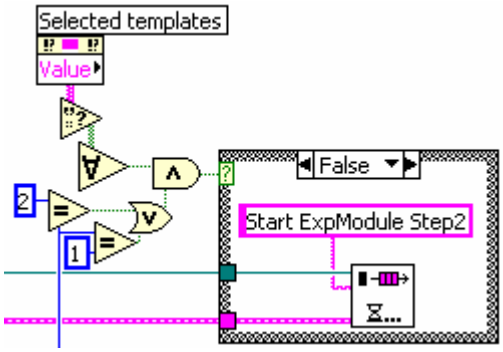

[35] Point at the index control at the top left to select the whole control. If you point inside the cluster on one of its elements/controls, the selected menu function (Make Current Value Default) will operate only on the control you were pointing at.

6. In the *Case Structure* of the 'Start ExpModule Step2' case a case for the new experiment module has to be added. The easiest way to do this is to make a duplicate of an existing case that most closely reflects what the new case should look like. To do so move to the case you want to duplicate and right-click while pointing on the frame of the *Case Structure*. In the upcoming menu select Duplicate Case. At minimum, one change has to be done in the new case: In the string constant exiting the *Case Structure* at the top right corner replace the name of the experiment module VI with the name of the new VI (**NewModule.vi**). If the new experiment module has new parameters that require new front panel controls, the content of the new case might require further modifications. For that, see the next section, 9.3 New control parameters.

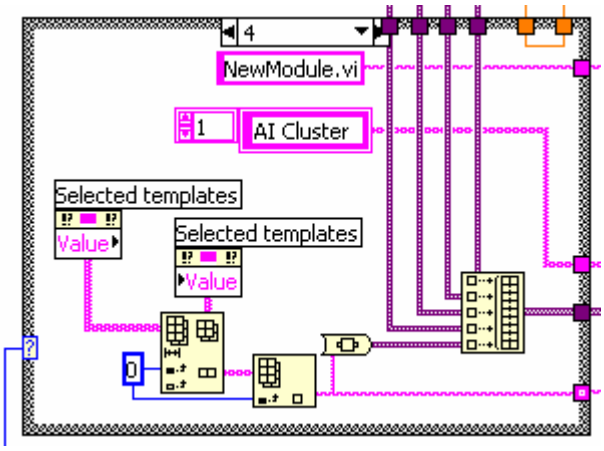

7. In the *Case Structure* of the 'Process' case a new case has to be added to process the data acquired by the new experiment module. As described above, the easiest way to do this is to duplicate an existing case and modify it. If the new experiment module requires analysis results (either from analyzing a trace as with the IV Relation module or from extracting analysis results from the header as with the Gsyn Threshold and the Synaptic Gain module) to be displayed, a new page can be added to the front panel indicator 'Plots' and indicators for the display of these experiment module-specific results can be placed on that page.

8. In the TRUE-case of the *Case Structure* contained in case 2 ('Menu Selection (User)') of the *Event Structure* in the 'Check Controls' case the name of the new module has to be added to the string array constant.

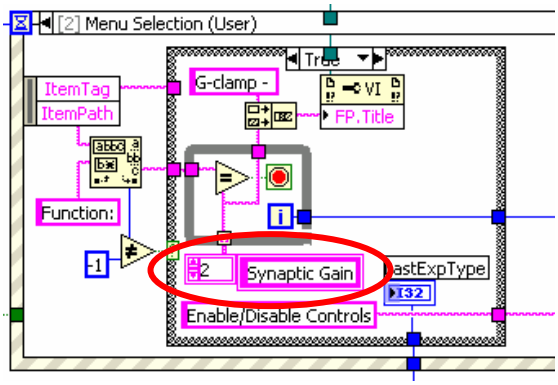

9. In **G-clamp.llb/GetDateFilename.vi**add an element to the string array to specify the 3-character file extension for the data files created by the new experiment module.

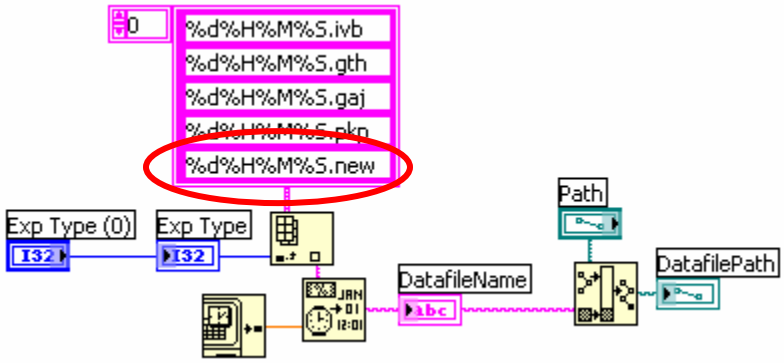

9.3 New control parameters

G-clamp.vi groups related parameters into a cluster. In the 'Start ExpModule Step2' case clusters are converted to a variant and the method 'Set Control Value' is repetitively invoked to transfer the elements of a 1-D array of variants to the experiment module VI. Thus an easy way to add new experiment-specific parameters is to bundle them all into a cluster, convert the cluster to a variant and add the variant to the 1-D array of variants that is build in the experiment module-specific case and that is successively transferred to the experiment module VI. This method requires that in the experiment module VI the variant is converted back to a cluster and the individual parameters accessed by unbundling. Note that the name of the variant control in the experiment module VI has to be added in **G-clamp.vi** to the 1-D array of strings that feeds into the 'Control Name' input of the 'Set Control Value' *Invoke Node*.

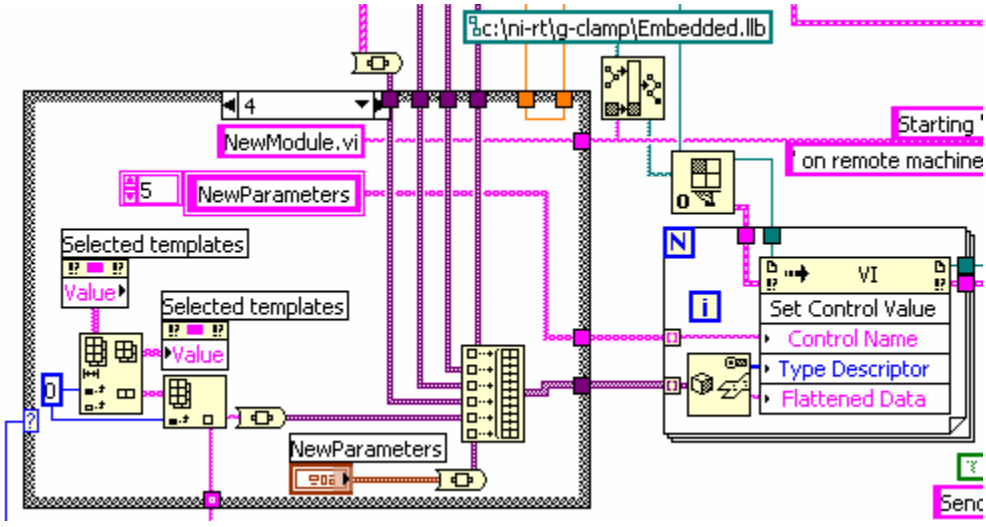

10 Non-LabVIEW files

G-clamp uses a number of files (VIs, DLLs) that are not part of the LabVIEW distribution and that have been downloaded from NIs website.

10.1 RT FIFOs

RT FIFOs allow transfer of data in and out of the time-critical feedback loop. They are implemented as a set of VIs (in RTFIFO.LLB), which draw on a dynamic link library (NBFIFO.DLL). To download these files together with some example VIs click on the link at the end of the tutorial below (which can also be found on NIs website) or contact me.

Real-Time FIFO for Deterministic Data Transfer Between VIs.

In LabVIEW Real-Time(RT) applications, you may need to transfer data to or from a VI set to time critical priority (time critical VI). This data can be transferred to or from a non-deterministic system, such as over the network to another computer, or to the hard drive. Typically, the data is first transferred to or from a VI set to normal priority, or a priority lower than time critical, which we will call the Communication Loop. Non-deterministic operations can then be performed in the Communication Loop without harming the real-time performance of the Time-critical Loop. The Communication Loop can then communicate with an external application over the network, or perform File I/O.

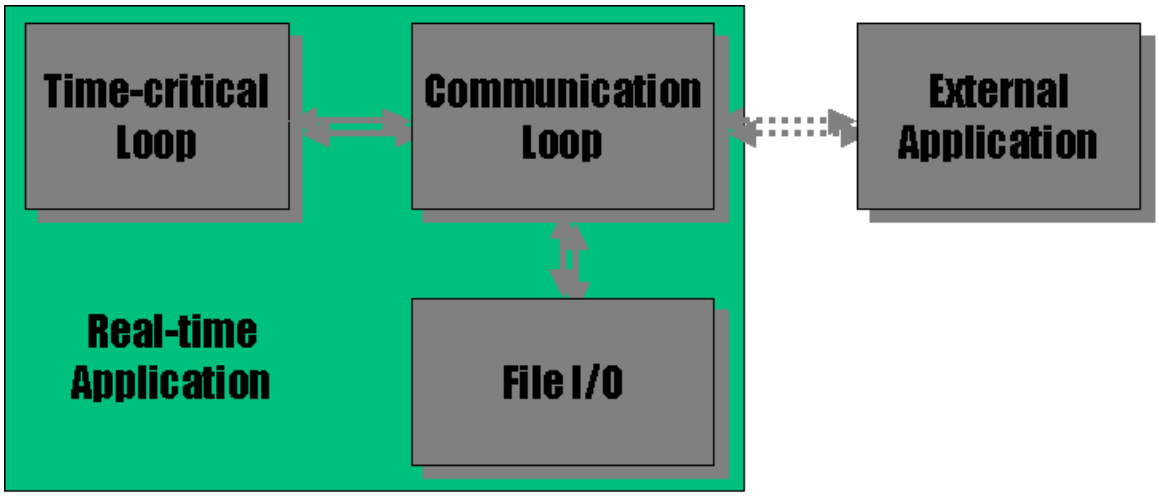

Figure 1: A common real-time application structure.

Table of Contents:

- Communicating Data Between VIs

Communicating Data Between VIs

There are three methods to communicate between VIs: global variables, functional globals (a VI that acts like a global variable), and a RT FIFO. FIFO stands for "**F**irst **I**n, **F**irst **O**ut". Global variables are a lossy form of communication since there can be many writes to the global variable before a read is ever performed, thus data can be lost. Since only one VI can access a global variable at a time, it can cause priority inversions, which in turn cause jitter, or increase execution time, in the time critical loop. Functional globals have a similar behavior. However, with the RT FIFO, a write and a read can be performed at the same time. Also, the RT FIFO acts like a fixed size queue, so that data elements that you write to an RT FIFO do not overwrite previous elements, unless the RT FIFO is full, in which case the oldest element is over written. The RT FIFO can be a lossy communication if the reader does not read elements from the FIFO before the FIFO fills up. The advantage of using the RT FIFO is that even if the reader pauses momentarily, and multiple writes to the RT FIFO occur during that time, data is not lost as long as the reader can catch up and read the elements out of the RT FIFO before it fills up. This document will focus on the third method of communication between VIs: the RT FIFO.

Using RT FIFO

The RT FIFO is simple to use. Its use involves creating the RT FIFO in one VI and either passing the RT FIFO reference to the other VI, or opening a reference to the RT FIFO in the another VI. Then writes to the RT FIFO are performed in one VI, and reads from the RT FIFO performed in another VI, and finally, the RT FIFO is deleted. Figure 2 shows an example of using the RT FIFO, although in this example data is transferred to and from the same VI.

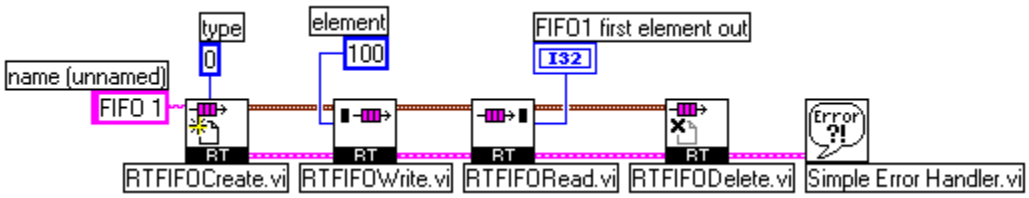

Figure 2. A Very Simple RT FIFO Example.

Creating an RT FIFO

An RT FIFO is created using the RTFIFOCreate VI. The type of elements that the RT FIFO will contain is determined by type of the data wired to the **type** input terminal (the RT FIFO VIs are polymorphic). All of the elements in an RT FIFO must be of the same type. RT FIFOs can be created of elements of the following types:

- Double
- Single
- I8
- I16
- I32
- U8
- U16
- U32

RT FIFO elements can also be arrays of the same types as listed above. To specify the size of the arrays in each RT FIFO element, first wire an array to the **type** input terminal, then wire the size for the arrays to the **elements in array** input terminal. The reference output for the RT FIFO, **rt fifo**, is a cluster, and will be pink for RT FIFOs with array elements. In Figure 3, an RT FIFO called FIFO 1 is created that contains array elements. In this case each array element has 5 elements.

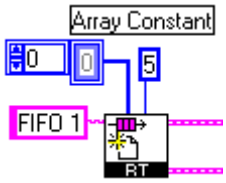

Figure 3. Creating an RT FIFO of Array Elements.

The RT FIFO is fixed length, and the memory for the RF FIFO is allocated when the RT FIFO is created. If the RT FIFO was of unlimited length, then it would have to dynamically allocate more memory as the number of elements in the RT FIFO increased. Determinism, or real-time behavior, of time critical VIs would be harmed if this dynamic memory allocation occurred inside of the time critical VI. To specify the size of the RT FIFO, wire the desired size to the **size** input terminal of the RTFIFOCreate VI. In Figure 4, an RT FIFO of 20 elements is created.

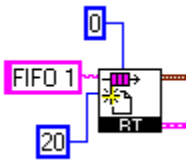

Figure 4. Specifying the RT FIFO Size.

Opening a reference to an existing RT FIFO

To open a reference to an existing RT FIFO, use the RTFIFOCreate VI with the name of the RT FIFO wired to the **name** terminal and a TRUE wired to the **return existing** terminal as shown in Figure 3.

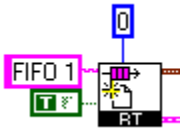

Figure 3. Opening a Reference to an Existing RT FIFO.

Writing when full or reading when empty

If you perform a write when the RT FIFO is full, the oldest element is overwritten and the **overwrite** output will be TRUE. To avoid overwriting elements, you need to either make sure that the reader will always read elements from the RT FIFO faster than they are written, or you need to ensure that the RT FIFO is large enough to contain the elements that are written to it while the reader is unable to read. You also need to make sure that the reader has the ability to catch up to the writer. In other words, the reader needs to be able to read points from the RT FIFO faster than the writer on the average, and the RT FIFO needs to be large enough to store elements while the reader is busy.

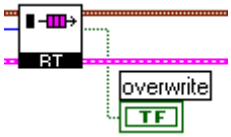

Figure 4. **Overwrite** Output.

If you perform a read when the RT FIFO is empty, then the **empty** output will be TRUE.

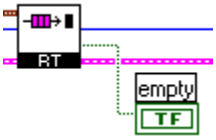

Figure 5. **Empty** Output.

Real-Time FIFO Example

It is suggested to place RTFIFO.LLB into a sub-folder of the user.lib folder of your LabVIEW system directory. This will make the VIs accessible via the **User Libraries** button in the **Functions Palette**. Placing NBFIFO.DLL into the same directory ensures that LabVIEW will find the DLL automatically when needed.

10.2 Read Time Stamp Counter - rdtsc

from National Instruments website:

Measuring the Determinism of Real-Time Applications (5.1.2)

Print this Page

This example demonstrates a method of measuring the determinism, or jitter, of an application using the Read Time Stamp Counter (RDTSC) assembly instruction for Pentium-class processors. This method of timing can resolve timing measurements at the frequency of your Pentium-class processor.

In this example, a top-level VI that is set to NORMAL PRIORITY calls a subVI set to TIME-CRITICAL PRIORITY (HIGHEST). The subVI has been instrumented with the RDTSC assembly call to read the Time Stamp Counter register off the Pentium-class processor every loop iteration. In order to avoid memory allocations, the array holding the time stamps is pre-allocated outside the For loop. Each subsequently measured time is then placed into the array using the Replace Array Subset function.

You must implement your custom application in a similar manner to properly measure its software determinism.

NOTE: In order for this timing method to function properly, you must provide your processor speed.
- This method results in erroneous data when running on laptops because laptops frequently adjust the processor clock speed dynamically to conserve energy when there is no load. To remedy this problem, place an empty running While loop set at NORMAL PRIORITY in parallel with the application being timed.
- The RDTSC instruction also returns erroneous data from dual processor machines because the instruction does not always grab the time stamp from the same processor. Each processor's Time Stamp Counter is running independent of the other.

Software Requirements

Application Software:	LabVIEW 5.1
Toolkits and Add-ons:	
Additional Software:	
Language(s):	LabVIEW

Download Example

Download - rdtsc.zip	67 kilobyte(s)

10.3 SetTimeDate

From National Instruments website:

Setting the System Date and Time

This VI sets the system time and date on your PC or PXI computer running either Windows or the LabVIEW Real-Time Operating System. It calls a DLL called Settime.dll. The DLL was built in LabWindows/CVI. Place the cvi_lvrt.dll from the attached zip file in your LabVIEW directory (~\National Instruments\LabVIEW\), and then run settimedate.vi. If you are changing the time of an RT Engine, target LabVIEW Real-Time to your RT Engine and run settimedate.vi.

This VI will change the time in the computer's BIOS at the same time it changes the operating system's time.

When building an application using this VI, the DLLs must be included as support files.

When using this VI on the FP-2000/2010, you will want to disable the time synchronization service on the FP-20xx. This service sets the system time on the FP-20xx to the GMT timezone, and it doesn't account for differences with respect to your time zone. You can disable the synchronization service by setting the Time Synch Server IP address to 0.0.0.0.

This VI does not work correctly on laptop computers. It sets the time to hour + 7.

Software Requirements

Application Software:	LabVIEW 6.0
Language(s):	LabVIEW

Download Example

Download - settimedate.zip	155 kilobyte(s)

Comments:

- I don't understand what **cvi_lvrt.dll** is needed for. We found that for **SetTimeDate.vi** to work **Settime.dll** is sufficient.
- Date and time are system properties on Windows computers. To use **SetTimeDate.vi** on a Windows computer thus requires to be logged in with administrator privileges.
- The *While Loop* in **SetTimeDate.vi** tends to monopolize the CPU and should be slowed down by including a wait-function.

11 LabVIEW RT specifics

11.1 AI SingleScan's "sleep mode"

The following two articles from National Instruments knowledge base explains the function of the parameter

[NI-DAQ]

UseSleepingTimedNonBuffered=FALSE

in the file c:\ni-rt.ini on the PXI controller

How Can I Achieve Control Loop Rates Faster Than 1 kHz Using LabVIEW Real-Time?

Product Group: DAQ Documentation

Product Name: NI-DAQ

Problem: I am using LabVIEW Real-Time's Wait Until Next ms Multiple function to control my loop cycle time; however, because the function has a 1 ms resolution, the fastest rate I can achieve is 1 kHz (or 1 ms loop cycle time). Are there any VIs in LabVIEW Real-Time that will allow me to achieve a faster loop rate?

Solution: Using the Wait and Wait Until Next ms Multiple functions, a LabVIEW Real-Time programmer can achieve loop rates of 1000 Hz. Alternately, loop rates can achieve their maximum rate if there is no delay in the loop; however, without a delay we cannot control the rate of the loop accurately. Starting with NI-DAQ 6.7.0, AI SingleScan can anchor software timing to the onboard scanclock signal on E-Series DAQ boards in the real-time operating system. This new feature lets control applications harness hardware determinism in LabVIEW Real-Time.

When a DAQ board is configured for a certain scan rate and is ready to begin sampling, the onboard scanclock controls the timing of analog to digital (A/D) conversions. Each scanclock cycle corresponds to a single scan across all channels in the scan list. AI SingleScan simply collects data from the onboard FIFO buffer, which has begun to store data. In the Windows operating system, we can ensure that AI SingleScan will capture all data without any overwrite errors if the loop rate is faster than the hardware scan rate. However if the control loop rate is slower than the hardware scan rate, we will eventually overwrite unread data in the FIFO. In the real-time OS, the hardware scan rate controls the loop rate. AI SingleScan acts like a wait statement in the loop until the next active edge of the scanclock "wakes" AI SingleScan. When AI SingleScan "wakes" up, it executes as normal, collecting one scan of data from the onboard FIFO. When AI SingleScan is called in the next loop iteration, it "sleeps" until the next active edge of the scanclock "wakes" it up again. Thus AI SingleScan synchronizes your control loop to the hardware scanclock. You can monitor the output parameter of AI Singlescan called "scans remaining" to determine whether the overhead in the loop is preventing AI SingleScan from capturing all data (i.e. keeping up with the scanclock rate).

In addition to increasing the maximum achievable control loop rate past 1 kHz, AI SingleScan's "sleep mode" or "sleep pathway" benefits multithreaded applications. A control loop running at time-critical priority will starve other low priority threads if there is no delay or sleep mode built into the loop. AI SingleScan's sleep mode ensures that your time-critical code relinquishes the CPU for a period equal to 1/scan rate, allowing other lower priority processes, including the user interface, TCP/IP communication, file I/O, etc. to run. Furthermore, only the **time-critical priority setting** ensures a 1-to-1 correlation between your control loop and scanclock signal. If set to normal priority, for instance, AI SingleScan will be allowed to read from the onboard FIFO when an active scanclock edge arrives **OR when there is a backlog of data in the FIFO**. You can verify that this sleeping functionality is enabled by looking for the following entry in your NI-RT.INI file associated with the target on which you are executing code:

[NI-DAQ]

UseSleepingTimedNonBuffered=TRUE

This entry is present by default for all networked RT Series PXI Controller targets. Networked RT Series PXI Controller's NI-RT.INI files can be found in C:\NI-RT.INI of the target's hard drive. The AI Single Scan sleep mode is not turned on by default for the 7030 family RT Series DAQ devices. The 7030 product family's NI-RT.INI file can be found in your ~\LabVIEW RT\Resource folder.

With NI-DAQ 6.9.1, you can also use a counter on an E Series board (DAQ-STC counters only) to control your loop rates.

Report Date: 01/15/2001

Last Updated: 11/04/2003

Document ID: 25E9K94U

Hardware Timed Loops Using AI SingleScan

AI SingleScan VI, one of the Advanced Analog Input VIs, is often used in single point Real-Time applications, such as PID control. Assuming that the functionality is enabled in the NI-RT.INI file for the RT Engine, AI SingleScan behaves differently in LabVIEW Real-Time than in LabVIEW for Windows. There is also a similar VI in the intermediate DAQ Analog Input palette. This version of the VI just calls AI Single Scan and has the same inputs, except **data in**.

Using the Wait and Wait Until Next ms Multiple functions, a LabVIEW Real-Time programmer can achieve loop rates with sleep modes of 1000 Hz at best. A user can achieve higher loop rates but this would be done without sleeping at all. However, a new functionality of AI SingleScan for LabVIEW Real-Time allows the analog input scanclock to control when a thread sleeps and wakes up. This also gives a sleeping resolution finer than 1 millisecond.

After a DAQ board is configured for nonbuffered input at a certain scan rate and is ready to begin sampling, the hardware scanclock controls the timing of analog to digital (A/D) conversions. Each time the scanclock pulses, the board performs an A/D conversion for every channel in the scan list and generates an interrupt that is handled by the AI SingleScan VI in LabVIEW Real-Time. The DAQ board stores the data from the scan in its hardware FIFO buffer. Meanwhile, the thread from which the AI SingleScan VI was called wakes up when the interrupt is detected, and the AI SingleScan VI acquires the data from the hardware FIFO buffer. The rest of the code in the loop is executed, and upon the next iteration, the AI SingleScan VI node goes to sleep again to repeat the cycle.

This document will discuss some of the features of AI Single Scan in relation to LabVIEW Real-Time.

Table of Contents:

Using Sleep Mode to Time Loops

In LabVIEW for Windows, when doing nonbuffered analog input (buffer size = 0), AI SingleScan will return immediately if there is data in the FIFO of the DAQ board. If there is no data in the FIFO, then AI SingleScan will wait until data arrives in the FIFO before returning.

In LabVIEW Real-Time, starting with NI-DAQ 6.7.0, AI SingleScan has a sleep mode which is enabled by default in the NI-RT.INI file. When sleep mode is enabled, and you are performing nonbuffered analog input, when AI SingleScan is called, it will sleep until the next active scan clock edge occurs. Only then will AI SingleScan return, even if the FIFO had data when AI SingleScan was called. While AI SingleScan is waiting for the next active scan clock edge it causes the entire thread it is in to sleep. A thread is comprised of all the VIs (and other processes) in the same execution system at the same priority, so the VI AI SingleScan is in, and all other VIs set to the same priority and execution system as the VI

that AI SingleScan is in, will sleep until the next active scan clock edge. Since Data Aquisition is usually done at time critical priority, the sleep mode of AI SingleScan is necessary to allow lower priority processes to run.

Without this sleep mode, you would have to use Wait VI or Wait Until Next ms Multiple VI to make your VIs sleep to allow lower priority VIs to run, but these Wait VIs only have resolution of 1 millisecond. With this sleep mode, AI SingleScan provides the right amount of sleep time automatically.

Preallocating arrays for Control Loops

Since memory management harms determinism, AI SingleScan has an input called **data in**. AI SingleScan is a polymorphic VI, meaning it can be configured for different data types. The Single-Point Waveform version is the most common version of this VI used in Real-Time applications and is shown below. This document will discuss the features of this VI specifically, but the principles apply to the other versions as well.

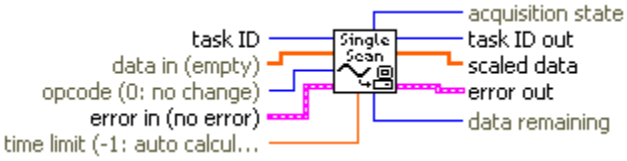

When **data in** is not wired, a call is made to the LabVIEW Memory Manager to allocate an array for **scaled data**. In order to prevent memory management, an array of the same size as scaled data out is expected to be passed in. This array would be created at the beginning of the program, and passed into the loop where AI SingleScan is located.

See Also:
Preallocating Arrays for Deterministic Loops

Using the AI Single Scan Opcode

AI SingleScan has an input called **opcode** which specifies the type of data retrieval the VI performs. There are 5 opcodes:

0: Do not change the opcode setting (default input).
1: Read oldest data (default setting).
2: Read newest data.
3: Set the value of the data remaining indicator only (no data is read).
4: Empty the FIFO only (for timed, nonbuffered acquisition only). No data is returned.

The two of most interest for LabVIEW Real-Time applications are 1. **Read oldest data**, and 2. **Read newest data**. When performing nonbuffered input, read oldest data will cause AI SingleScan to return the oldest scan from the FIFO after the next scan clock active edge arrive, and leave the other scans in the FIFO. Read newest data will return the scan that gets acquired at the next scan clock active edge, and clear the FIFO of old data.

For single point real-time applications, **Read newest data** should be used at least on the first iteration so that the FIFO is cleared of any scans that have arrived between the time that AI Start was called, and the first call of AI SingleScan. After the first iteration **Read oldest data** can be used in conjunction with **data remaining** to monitor if the VI is keeping real-time, as will be discussed next.

Determining Real-Time Status Using the Data Remaining Parameter

The **data remaining** output can be used to monitor whether or not an application is keeping up with the data coming into the FIFO. When using the **Read oldest data** opcode, if the FIFO had been initially cleared on the first iteration by using **read newest data**, then each new scan will also be the oldest, and after each call of AI SingleScan, the FIFO should be empty, and the **data remaining** output should be zero, indicating that data is not remaining in the FIFO. If for some reason, the program does not keep real-time, AI SingleScan is called with **read newest data** and there are one or more scans in the FIFO, then the **data remaining** output will be 1, indicating that your program did not keep real-time.

Verifying the Sleep Mode Configuration

You can verify that this sleeping functionality is enabled by looking for the following entry in your NI-RT.INI file associated with the target you are executing code on:

[NI-DAQ]

UseSleepingTimedNonBuffered=TRUE

This entry is present by default for all networked LabVIEW Real-Time Series PXI Controller targets. Networked LabVIEW Real-Time Series PXI Controller's NI-RT.INI files can be found in C:\NI-RT.INI of the target's hard drive. The AI Single Scan sleep mode is not turned on by default for the 7030 family LabVIEW Real-Time Series DAQ devices in LabVIEW RT 5.1.2, but is turned on by default in LabVIEW RT 6i. The 7030 product family's NI-RT.INI file can be found in your ~\LabVIEW RT\Resource folder.

11.2 File I/O in LabVIEW RT

From National Instruments knowledge base:

Optimizing File I/O in LabVIEW and LabVIEW RT

This document will explain how file I/O works and show how to optimize file I/O performance in various operating systems, including LabVIEW RT OS.

Table of Contents:

How does file I/O work?

Every operating system (OS) is responsible for implementing a file structure. However, the basic concepts are the same for all operating systems. We will begin by looking at the structure of a disk, which is the physical medium on which data is stored.

The disk generally consists of several platters. It is easy to think of a disk as a record player. To access the data on the disk, two read/write heads, attached to a single arm, are moved to the correct location. The platters are divided into equal-sized tracks. A track is made up of sectors. These sectors are the unit of data transfer. So, while users and applications think in terms of writing records, the operating system breaks these down into writable sectors which it then writes one at a time.

When the disk drive is operating, it is rotating at a constant speed. To read or write a sector of data, we must correctly position the heads at the beginning sector of the correct track. The time required to move the head to the correct track is "**seek time**." The time for the disk to rotate until the starting sector is under the head is known is "rotational delay." The sum of these two numbers is known as "**access time**." The time to complete the read and write operation is known as the **data transfer** time.

What is caching and how does it affect file I/O?

In general, a cache is a buffer that is used as an intermediate and faster data storage medium. More specifically, a disk cache is a buffer in main memory that maintains a local copy of disk sectors. Accessing main memory is significantly faster than accessing the disk. When an application needs to write to a sector on disk, the operating system first checks to see if that sector is available on the cache. If it is, no access to the disk is required. The data is written in main memory. Some time later, the contents of the cache will be written out to the disk. If the sector is not found in the cache the sector will be brought in from the disk to the cache.
Caching is used to reduce the average access time, by assuming that a sector that was written to once will likely be written to again some time later. There are many different design implementations of this idea, with various cache size implementations.

How can I optimize file I/O in LabVIEW?

Before we discuss optimization methods in LabVIEW, we need to distinguish between two very different types of file I/O operations.

Many applications require sequential access to a file, where the file is read from or written to, in order, from the start of the

file to the end. This type of application will benefit greatly from the caching mechanism, since neighboring sectors will likely be in the cache. Alternatively, our application might require random access to the file. That is, we may need to access unrelated, non-neighboring sectors of a file. This requires a very different way of thinking.

One thing to consider is that some file types are not easy to use for random access applications. An ASCII file requires a varying number of bytes for each data element. For example, the number 756 requires 3 bytes of storage while the number 7 requires only 1 byte. Therefore it is not possible to predict an element's location in the file. To find the element you need, you need to search the entire file. This makes random access very difficult and very inefficient with ASCII files. The solution is to use file types that are easier to search. Binary files are a very good choice for random access applications, since every element uses the same number of bytes in memory. Since we know exactly where a particular element is, we can easily index individual elements in a file.

How is LabVIEW RT different?

To maintain determinism, LabVIEW RT does not use a cache. This means that every write and read operation requires an access to the disk.

How can I optimize file I/O in LabVIEW RT?

Since LabVIEW RT does not use a cache, we need to minimize the access time to our disk.

The most important thing to consider is to write out data one sector at a time. In LabVIEW RT on a PXI controller, the sector size is 512 bytes. The reason for this is that every read and write operation will always execute in 512 byte increments. If our application requests a write of 30 bytes, the OS would have to first read the entire 512 byte sector, replace the 30 bytes you are writing, and then write the entire sector back. Similarly, if you wanted to read 30 bytes, the OS would have to read an entire 512 byte sector first, then pull out the 30 bytes needed. In fact, it takes less time to read or write 512 bytes than it does to read or write smaller byte sizes.

The best performance will be observed if you write 512 bytes at a time, and remain aligned with the file sectors. To ensure that you are starting your write or read at the beginning of a sector, keep your offset restricted to multiples of 512 (0, 512, 1024, etc.). If you wire an input that is not a multiple of 512, then you are no longer aligned with the file sectors. For example, if you wire an input offset of 1, then you actually will have to write to two separate disk sectors. On one sector you'll write 511 bytes, and on the other you'll write the left over 1 byte. Because we always write in 512 byte chunks, you'll actually write 512 bytes both times. This will significanlty degrade the peformance of the application.

12 Revisions

01/16/2004 new (revised) G-clamp v1.1.1:

- **Embedded.llb/Timing Analysis.vi**: Building of an array by indexing the output of a for-loop has been replaced by using 1) an initialized array fed into a shift register of the for-loop and 2) the replace-array-subset function. This avoids using new blocks of memory that increase by 1 array element with each iteration of the for-loop. As a consequence, the longest GAI-template that can now execute correctly on a PXI controller with 192 MB RAM increased from 25.4 MB to 30.5 MB.

  replaced:

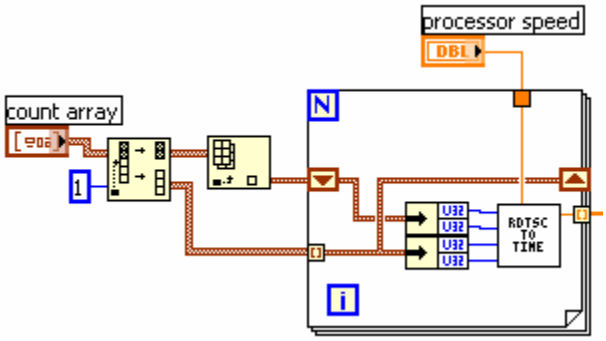

  with:

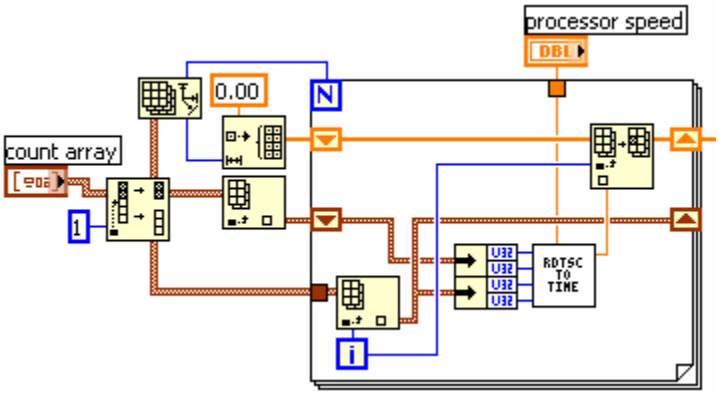

- **Embedded.llb/Gsyn Threshold Sub.vi**: The constant feeding into the index-input of the index-array function that reads out the stop-value for the iterations-loop has been changed from 10 to 9. Now aborting an on-going data acquisition works.

  new:

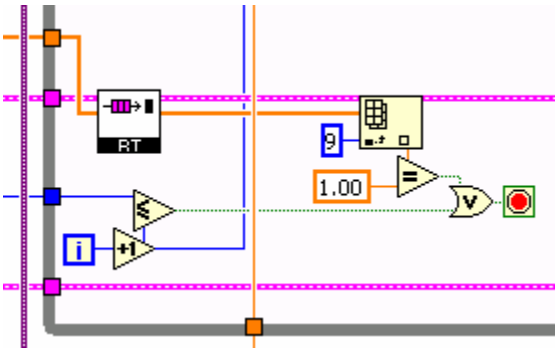

An analogous change has been made in **Embedded.llb/IV Relation Sub.vi** and **Embedded.llb/V-clamp Sub.vi**.

- **Embedded.llb/Gsyn Threshold.vi**: The true-condition for the case-structure in which data traces are written to the host computer via the TCP-write function can now be achieved not only by an empty result data queue but also by receiving an abort command by the user. This speeds up the stop process.

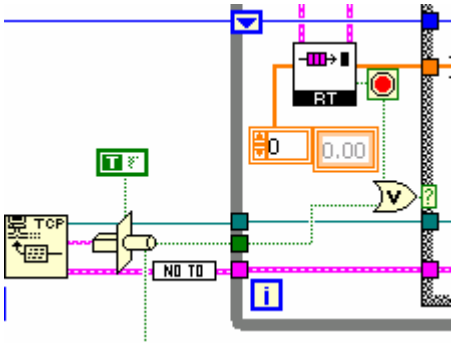

new:

An analogous change has been made in **Embedded.llb/IV Relation.vi** and **Embedded.llb/V-clamp.vi**.

- **G-clamp.llb/G-clamp.vi**: The time-out value for the event structure in the default case "Check Controls" has been made dependent on the Boolean variable "DAQ in process?" and whether the queue determining the next case to execute is empty or not. Thus - as before - if no data acquisition is in progress and the queue does not contain elements already, the event structure times out after 250 ms. Otherwise the time-out value is 1 ms.

- **G-clamp.llb/G-clamp.vi**: Using the Stop F12 button to abort an ongoing experiment now disables the button to prevent repetitive usage of the button as it can take some time before the effect of the abort command becomes apparent. The button is re-enabled after the stop of the experiment module on the PXI controller has been detected.

01/22/2004 G-clamp v1.1.2:

- **Embedded.llb/ScriptAnalyzer.vi**: The main script-analyzing algorithm has been re-structured to make its logic simpler. While this revision does not affect functionality of ScriptAnalyzer.vi, it should facilitate future additions to the script language.

- **G-clamp.llb/G-clamp.vi**: The calculation of the leak resistance has been moved in a new case of the *Event Structure*. The calculation is triggered by a mouse-up event in the graph on the 'IV Relation' page and thus by dragging the cursors. With this change the calculation is only done when the user requests it and not any more each time the default case "Check Controls" executes.

old:

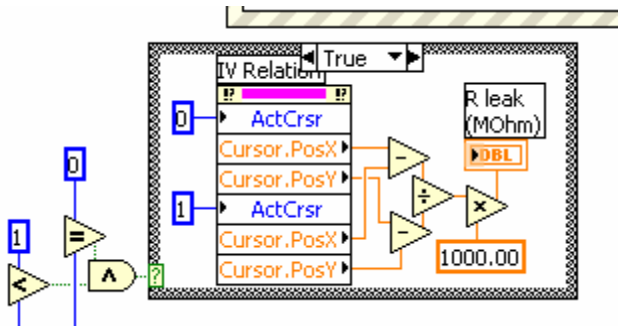

new:

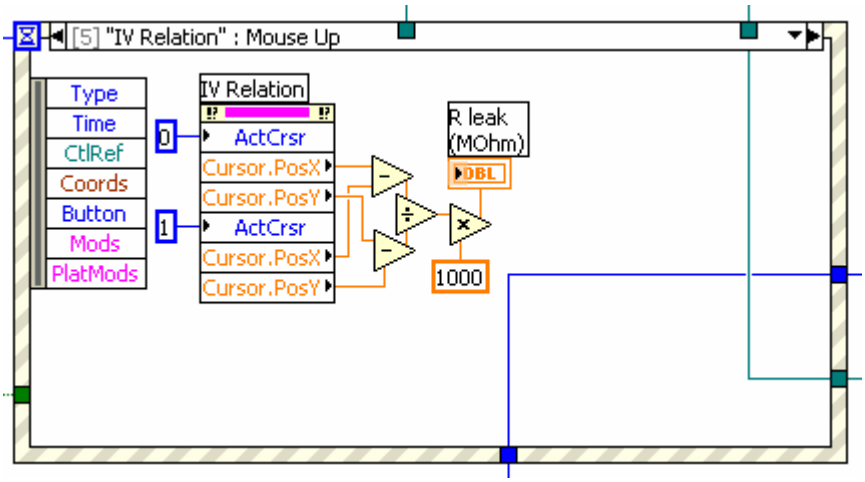

- **G-clamp.llb/G-clamp.vi**: All code relating to the property 'Row Headers[]' of the *Table* indicator 'Selected templates' has been deleted as it didn't serve any purpose in **G-clamp.vi**.

- **G-clamp.llb/G-clamp.vi**: In the 'Start Failed' case forcing dataflow by using the 'error out' output of *TCP Close Connection* at the 'error in' input of *Close LV Object Reference* has been replaced by placing *Close LV Object Reference* into a *Sequence Structure*, which executes only after receiving the 'error out' output of *TCP Close Connection*. The reason is that in the old scheme a failure to establish the TCP connection in the 'Start ExpModule Step2' case would result in an error reported by *TCP Close Connection*. Passing an error on to *Close LV Object Reference* would prevent *Close LV Object Reference* to function properly, i.e. the reference to the experiment module VI would remain open.
  General Error Handler.vi has been moved from the 'Start Failed' case to the 'Start ExpModule Step2' case and replaces the *Unbundle* function in that case that is used to obtain the error status.

- **G-clamp.llb/G-clamp.vi**: In the case for processing IV Relation data of 'Process' the insertion of 'Stop' into the queue has been deleted, as it is unnecessary.

G-clamp.llb/G-clamp.vi: In the 'Exit' case the string array constant used at the TRUE case of *Select* has been changed to 'Abort' (index 0) and 'Done' (index 1). Before that change index 0 ('Send control values') caused needless execution of the default case 'Check Controls' and index 1 ('Stop') alone is insufficient to terminate an ongoing experiment.

- **Embedded.llb/List Templates.vi**: The default value of the control 'Output channels' has been changed from '0' to '0,1' to achieve resetting of both analog output channels present on most NI DAQ boards.

- **Embedded.llb/List Templates.vi**: Using a pre-initialized 1-D array of cluster with *Replace Array Subset* for the conductance settings in the first *For Loop* has been replaced by a conditional *Build Array* that depends on the 'found?' output of **ReadKey.vi**. With the old implementation array-size depended on how many conductance module VIs were found by **Create Plugin List.vi** in **Embedded.llb**, while it should depend on the number of conductance module entries in **Embedded.cfg**.

- The location of the conductance module VIs has been changed: They are no longer located in the library **Embedded.llb**. They are now located in the sub-directory 'gModules' of 'c:\ni-rt\g-clamp' on the PXI controller. **Create Plugin List.vi** has now much fewer VIs to test and is done much faster, resulting in faster initialization when **G-clamp.vi** is started (Accordingly the 'directory' input of **Create Plugin List.vi** is now provided with the string constant 'gModules' instead of 'Embedded.llb' in **List Templates.vi**).
  In order to make this change work, the path information to the conductance module VIs had to be changed in **Embedded.llb\V-dependent Conductances.vi**, which is the caller of the conductance module VIs. This was done by opening **Embedded.llb\V-dependent Conductances.vi** and all implemented conductance module VIs (**gNa.vi**, **gKdr.vi**, **gKM.vi**, **gLeak.vi** and **gKA.vi**) on the host computer and using the 'Save as…' option to save the conductance module VIs into a directory 'c:\ni-rt\g-clamp\gModules' on the host computer. Upon subsequent closing of **Embedded.llb\V-dependent Conductances.vi** the saving requested by LabVIEW of **V-dependent Conductances.vi** because of the change in the location of the sub-VIs is accepted and the conductance module VIs can be deleted from **Embedded.llb**. The updated **Embedded.llb** replaces the library on the PXI controller.

- **Embedded.llb\Gsyn Threshold.vi**, **Embedded.llb\Gsyn Threshold Sub.vi** and **Embedded.llb\Synaptic Gain.vi**: The sub-VI **GetTemplateFilepath.vi** has been replaced by a *Build Path* with the path constant 'c:\ni-rt\g-clamp\template' as 'base path' input and **GetTemplateFilepath.vi** has been deleted from **Embedded.llb**.

- **Embedded.llb\Synaptic Gain.vi**: A *For Loop* which concatenates the names of the used template files into one string together with result string indicator 'TemplateFile' has been deleted as that information is used nowhere.

- **Embedded.llb\LoadTemplates.vi**: An unused *EOF* has been removed.

- **Embedded.llb\Synaptic Gain Sub.vi**: The 1-D array of cluster for the time stamps has been set to a length of exactly equal to the template with a maximum of 1000000.

- **G-clamp.llb\G-clamp.vi**: A menu item 'Help' has been added to the custom run-time menu: The sub-item 'About G-clamp…' is a user-item and is dealt with in a new case 'About G-clamp…'. The main purpose of the dialog presented is to give the G-clamp version number. The sub-item 'About LabVIEW…' is an application item automatically handled by LabVIEW and therefore does not require any additional programming. It gives the LabVIEW version number and other information.

<u>02/23/2004 G-clamp v1.2:</u>

- The use of template files of type *.GTM with the Synaptic Gain module has been phased out. This allowed the following code simplifications:
    - In **Embedded.llb**:
        - **List Templates.vi**: The '*.gtm' element of the 1-D array of strings feeding into the 'pattern' input of *List Directory* has been deleted.
        - **Synaptic Gain.vi**: Determining the file type to determine the header length of the template file has been removed.
        - **LoadTemplates.vi**: The input 'HeaderLength (Bytes)' has been removed and the shift register feeding into the 'pos offset' input of *Read File* is now initialized with the 'offset' output of the *Read File* used to get the template header.
    - In **G-clamp.llb\G-clamp.vi**:
        - In the 'Enable/Disable Controls' case enabling/disabling of gtm-files in the 'Available templates' control has been removed.
        - In the 'Selection Modified' case the second Case Structure changing display properties of the controls 'Gmin/1' and 'Gmax/2' has been removed.

- **Embedded.llb** has been stripped of all VIs that are not used by G-clamp. This was done by renaming **Embedded.llb**, opening all VIs called via VI server by **G-clamp.vi** from the renamed library and saving them with File > Save with Options… > Save entire hierarchy into a newly created library **Embedded.llb**. Because this saves also the conductance module VIs (**gNa.vi**, **gKdr.vi**,…) into the library, **V-dependent Conductances.vi** was opened and all its implemented conductance module VIs replaced with the same VIs from the directory c:\ni-rt\g-

clamp\gModules. Finally the conductance module VIs were deleted from **Embedded.llb**.

- **Embedded.llb\IV Relation.vi**, **Embedded.llb\Gsyn Threshold.vi** and **Embedded.llb\V-clamp.vi**: The conversion from SGLs to DBLs before a trace is transmitted to the host computer has been deleted. The same was done in **Embedded.llb\Synaptic Gain.vi** with the two 4-element 1-D arrays transmitted to the host after execution of the template.

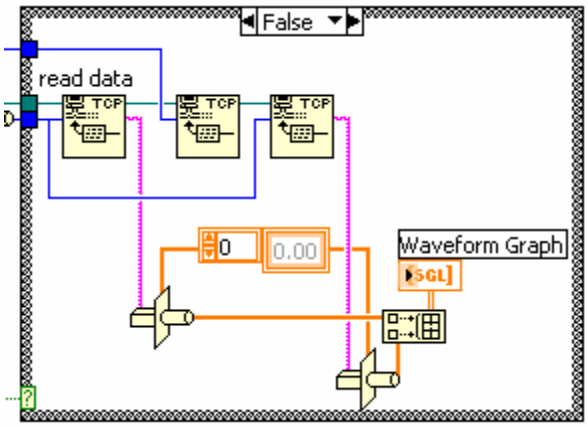

In **G-clamp.llb\G-clamp.vi** this necessitated the following changes: In the 'New Data?!' case the data format of the 1-D array constant and of the indicator 'Waveform Graph' was also changed to SGL. In the 'Process' case the inputs to all *Build Waveform* functions were changed to DBLs while the format of the controls/indicators 'A-D rate', 'RT Loop Info', 'G-scaling', 'G's', 'fpre' and 'Gain' was changed to SGLs.

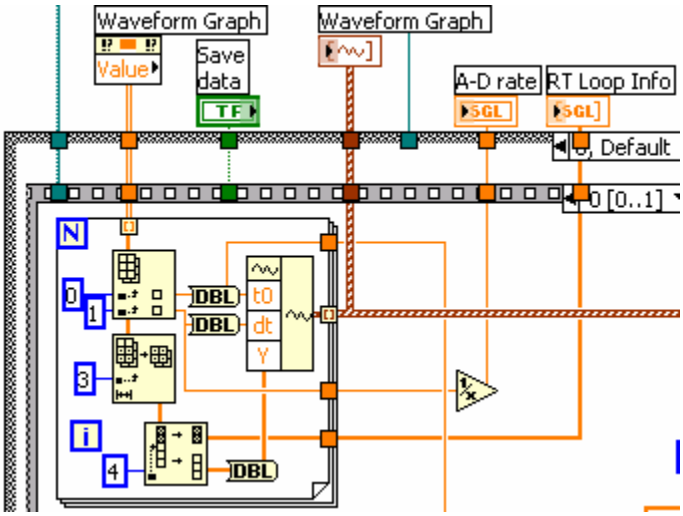

- **G-clamp.llb\G-clamp.vi** and **Embedded.llb\Synaptic Gain.vi**: Conversion of the two Boolean controls 'Save data' and 'Show traces' into word integers (I 16) before they are TCPed to **Synaptic Gain.vi** in the 'Process' case of **G-clamp.vi** has been removed. Accordingly the TCP transmission is interpreted in **Synaptic Gain.vi** as an array of Booleans and not any more as an array of I 16.

- **Embedded.llb\Synaptic Gain.vi**: The sequence of two *Array Subsets* in each of the two *For Loops* of the *Case Structure* saving the acquired traces has been reduced to one *Array Subset*.

- **G-clamp.llb\G-clamp.vi**: In the 'Plot all' case in the first 'Waveform Graph' *Property Node* a write-property 'Xscale.ScaleFit' set to 0 (i.e. do not autoscale) has been added. Now the final plotting of all acquired traces performs much

faster, as long graph updates when the x-axis is set to auto-scale are now shortened by displaying only tiny stretches.

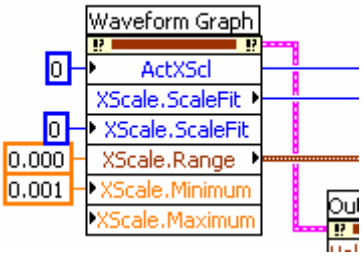

- **G-clamp.llb\G-clamp.vi**: In the case of the 'Process' case processing data from the Synaptic Gain module, the 1-D arrays of string indicators 'TraceFileName' and 'UsedTemplate' have been deleted. Using 1-D arrays was a leftover from a time when GAJ-files stored information from a series of Synaptic Gain experiments. Also, in frame 2 of the *Sequence Structure* the *For Loop* performing the repeated *File Write* operations for the now obsolete saving of information from a series of Synaptic Gain experiments has been deleted. Thus all the parameters saved are now simple values and not any longer elements derived from 1-D arrays. Therefore these changes also take care of a bug which resulted in saving of the oldest 'fpre' and 'Gain' values instead of the newest if the 1-D arrays 'fpre' and 'Gain' were not emptied with the 'Clear Graph' control after each Synaptic Gain experiment.

- **G-clamp.llb\G-clamp.vi**: In the case of the 'Process' case processing data from the Synaptic Gain module, decoding of the trace acquisition time has been changed. The old version used the *Format Date/Time String function*. This function assumes that the input 'seconds (now)' is relative to 12:00 a.m., January 1, 1904, Universal time while in fact the number of seconds provided by **SecondsToday.vi** in **Synaptic Gain Sub.vi** is relative to 12:00 a.m. of the current day.

- **G-clamp.llb\G-clamp.vi**: In the 'Stop' case using the *Property Node* 'Execution:State' to determine when to close the reference to the experiment module VI is not necessary and has been removed by deleting the whole *While Loop*.

- **G-clamp.llb\G-clamp.vi**: In the 'Stop' case the experiment module-specific condition for adding a string 'Start ExpModule Step1' to the queue is now determined by comparing the variable 'Exp Type' with a 1-D array containing an element for each experiment module for which the condition ought to be TRUE.

- **Embedded.llb\Gysn Threshold Sub.vi**: Instead of calculating again the correct values for the 'elements in array' and 'size' inputs of **RTFIFOCreate SGLA.vi** to initialize 'Result Data Queue', the 'return existing' input was set to TRUE. Now **Gysn Threshold Sub.vi** simply opens a reference to 'Result Data Queue' as created earlier in **Gysn Threshold.vi**. The same was done with **RTFIFOCreate SGLA.vi** that initializes the RT-FIFO 'Control Values'. Analogous changes were done in **IV Relation Sub.vi** and **V-clamp Sub.vi**.

- **Embedded.llb\Gysn Threshold.vi** and **Embedded.llb\Gysn Threshold Sub.vi**: Instead of using **read gsyn.vi** in **Gsyn Threshold.vi** and in **Gsyn Threshold**

Sub.vi, i.e. read the template file twice, **read gsyn.vi** is now used once in **Gsyn Threshold.vi** and the RT-FIFOs 'Result Data Queue' and "Control Values' are used to get all necessary information into **Gsyn Threshold Sub.vi**.

- Information about processor speed and DAQ device # has been taken out of the clusters 'AI Cluster' and 'AO Cluster', respectively. This information is now transmitted to VIs executing on the PXI controller via the cluster 'PXI Target'. Thus in the 'Initialize' case of **G-clamp.vi** the method 'Set Control Value' is used to provide **List Templates.vi** with 'PXI Target' and in the 'Start ExpModule Step2' case of **G-clamp.vi** 'PXI Target' is converted to a variant and added to the array of variants successively transmitted to the experiment module VI via 'Set Control Value'. VIs affected by this change:
    - in **G-clamp.llb**: **G-clamp.vi**, **AnalogInOutConfig.vi**
    - in **Embedded.llb**: **List Templates.vi**, **IV Relation.vi**, **IV Relation Sub.vi**, **Gsyn Threshold.vi**, **Gsyn Threshold Sub.vi**, **Synaptic Gain.vi**, **Synaptic Gain Sub.vi**, **V-clamp.vi**, **V-clamp Sub.vi**, **DAQ Hardware Settings.vi**

- **Embedded.llb\Synaptic Gain.vi**: *EOF* (requiring *Open File* and *Close File*) to determine the length of the template file has been replaced with *File/Directory Info*.

was: 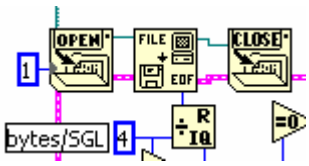

is now: 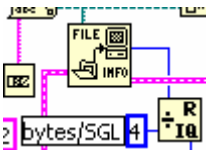

- **Embedded.llb\LoadTemplates.vi**: After the template has been assembled, a *Replace Array Subset* sets the value of the last template data point to 0. This brings the current command to 0 immediately at the end of the execution of the template. As a consequence, the **AO Write One Update.vi** in **Embedded.llb\Synaptic Gain Sub.vi**, which performed this current command reset after some delay, has been removed.